LAMP
By Nordeon USA

MUN DARK // SPECIFICATION SHEET

PROJECT NAME	TYPE
CATALOG NAME	DATE

MUN DARK
LED Wall Mount

FEATURES:

- Contemporary styled decorative luminaire
- Indirect lighting for accent
- Each diameter has a unique height to allow for individual design layouts
- All 3 diameters designed to provide identical luminance off the wall
- Integral 120 volt driver
- Designed in Spain, Assembled in the USA

C US

Specifications

LUMEN OUTPUT	Mun Dark 120 – 30 Lumens Mun Dark 180 – 45 Lumens Mun Dark 300 – 90 Lumens
COLOR RENDERING INDEX	Ra > 80 3 SDCM
LUMEN MAINTENANCE	50,000 L70 B50
OPTICS	Opal polycarbonate diffuser for indirect radtion off the wall
WATTAGE	Mun Dark 120 – 1.6 W Mun Dark 180 – 2.1 W Mun Dark 300 – 3.7 W
LUMEN EFFICACY	Mun Dark 120 – 18.8 Lm/W Mun Dark 180 – 21.4 Lm/W Mun Dark 300 – 24.3 Lm/W
LED DRIVER	Mun Dark 120 – Non-dimming 120V Mun Dark 180 – Non-dimming 120V Mun Dark 300 – Non-dimming 120V
HOUSING	2 piece cast aluminum construction with steel mounting plate
LUMINAIRE FINISH	Textured White (RAL 9016) or Graphite Black (RAL 7021)
MOUNTING	Surface mounting to wall via 3 mounting points
PROTECTION LEVEL	IP20
CERTIFICATION	CSA/US certified for Damp Locations
WEIGHT	Mun Dark 120 – 0.7 lbs Mun Dark 180 – 1.36 lbs Mun Dark 300 – 3.7 lbs

In a continuing effort to offer the best product possible we reserve the right to change, without notice, specifications or materials.
Technical specification sheets that appear on www.nordeon-usa.com are the most recent ones available.

Description

Mun Dark is a contemporary indirect lighting luminaire providing a “splash” of light on the surface behind. It may be used either as a way marker or as an artistic pattern for accent lighting.

The concept of Mun Dark was inspired based on a basic universal geometry - a point. A point which grows in accordance to the Fibonacci spiral using the Fibonacci numbering method beginning with 60 to arrive at the 120mm, 180mm, and 300mm diameters.

The varying diameters, each with its own unique height, allow the designer to closely space the luminaires and even overlap the shades as desired to create visual contrast.

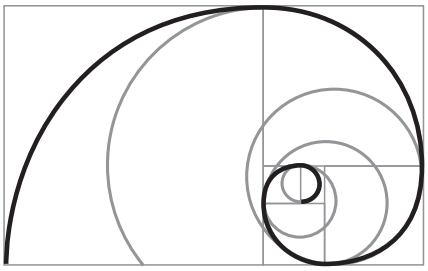

Ordering Information

MODEL	VERSION	DIAMETER	CRI/CCT	DRIVER	CRI
MUN	D				
	D Dark	**120** 120mm | 4 3/4"	**830** 80 CRI, 3000K	**120** Non-dimming 120V	**WH** White | RAL9016
		180 180mm | 7 3/32"	**840** 80 CRI, 4000K		**BG** Graphite Black RAL 7021
		300 300mm | 11 7/8"			

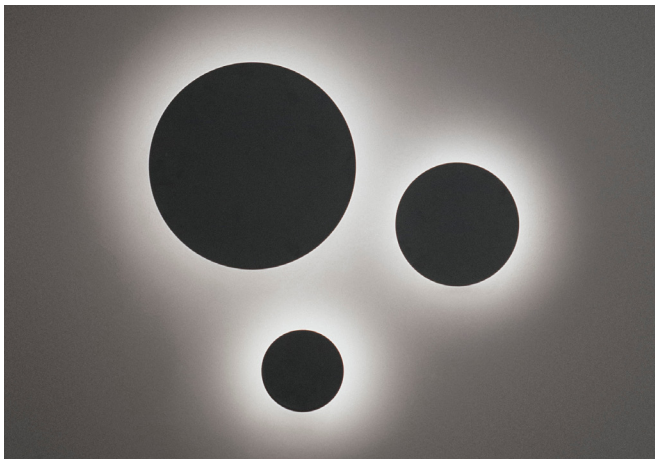

In a continuing effort to offer the best product possible we reserve the right to change, without notice, specifications or materials.
Technical specification sheets that appear on www.nordeon-usa.com are the most recent ones available.

Mounting

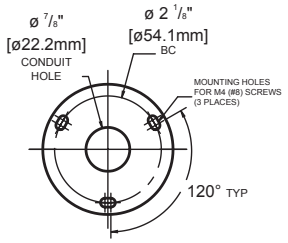

Mun Dark 120

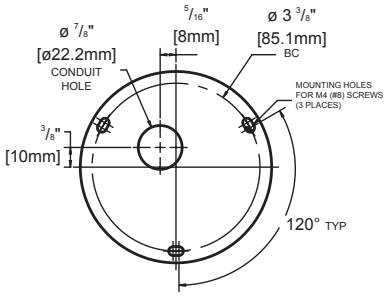

Mun Dark 180

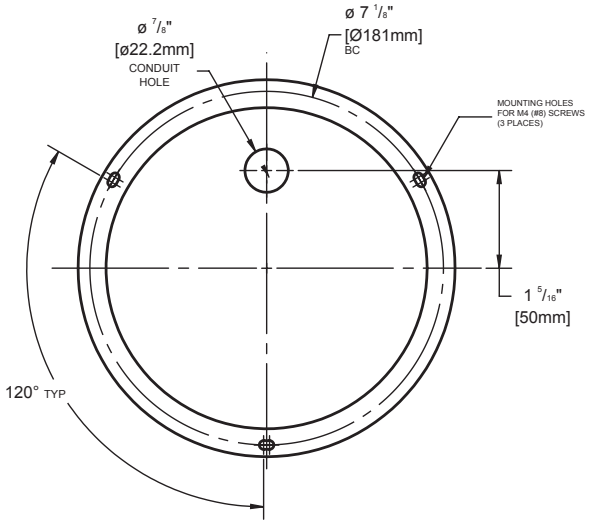

Mun Dark 300

Dimensions

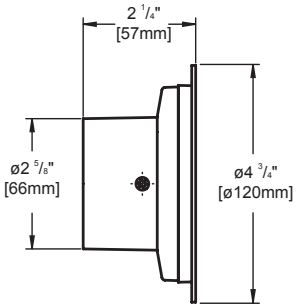

Mun Dark 120

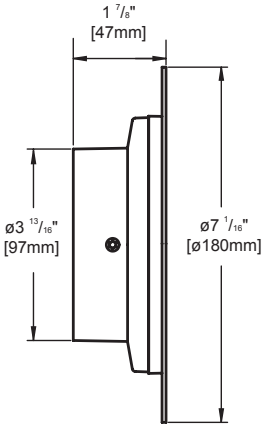

Mun Dark 180

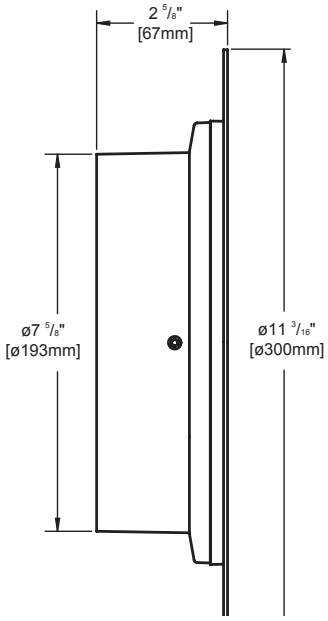

Mun Dark 300

In a continuing effort to offer the best product possible we reserve the right to change, without notice, specifications or materials.
Technical specification sheets that appear on www.nordeon-usa.com are the most recent ones available.

LAMP

By Nordeon USA

www.nordeon-usa.com **(for all Nordeon USA, Schmitz Lighting and Lamp Lighting products)**

In a continuing effort to offer the best product possible, we reserve the right to change, without notice, specifications or materials.
Technical specification sheets that appear on www.nordeon-usa.com are the most recent data available.