LEHB1

HIGH TEMP. LED HIGH BAY

Foundries • Steel Mills • Pulp/Paper Mills • Shipyards • Aircraft Hangars • Heavy Industrial

The LEHB1 Series LED Luminaire combines optical performance, energy efficiency, and outstanding versatility to meet the demand of industrial environments with high ambient temperatures and wet applications in heavy industrial plants, foundries, steel Mills, pulp and paper mills as well as aircraft hangars and shipyards also delivers a wide range of light outputs from 30,000 up to 100,000 lumens that replace 400W-2,000W HID / HPS / metal halide fixtures. The LEHB1 Series offers higher efficacy for increased energy savings, lower maintenance costs and shorter paybacks.

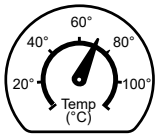

70°C / 158°F
High Temperature

LEHB1						
1	2	3	4	5	6	7

1 SERIES	2 SOURCE	3 VOLTAGE	4 AMBIENT TEMPERATURE	5 CCT	6 OPTICS	7 LENS
LEHB1	**L1:** 200W **L2:** 400W **L3:** 600W **L4:** 800W	**V1:** 120-277VAC (50/60Hz) **V2:** 347-480VAC (50/60Hz)	**65:** 65°C (Poly lens max Ta.) **70:** 70°C (Glass lens max Ta.)	**3:** 3,000K **4:** 4,000K **5:** 5,000K **57:** 5,700K	**15: 15°*** **30: 30°*** **60: 60°*** **90: 90°*** **T3:** Type III* **T5:** 120°† **3012:** 30x120°* * Polycarbonate lens only † Clear glass lens only	**C:** Clear Glass **D:** Frosted Glass **P:** Polycarbonate

CERTIFICATIONS

UL1598 / CSA-C22.2 No.250 (Wet/Damp)
Lumen Maintenance (L70) > 110,000 hrs. (reported)
-40°C to 65°C Ambient (w/ poly lens)
-40°C to 70°C Ambient (w/ glass lens)
CRI >70
IP66 / IP67
IK08 (Glass) / IK10 (Polycarbonate)
5G
ASTM B117-11 (1,000 hrs. salt spray tested)
FCC / CE / RoHS

Driver: 24/7 operation:
20,000 hrs. @ 70°C
30,000 hrs. @ 65°C
43,800 hrs. @ 60°C

CONSTRUCTION

Corrosion resistant aluminum alloy
High temp silicone gaskets
Thermal shock and impact resistant tempered glass or polycarbonate lens
All exposed fasteners stainless steel
Standard Black durable coated finish
1/2" NPT Hub(s)
Yoke anti-vibration brackets included (600W & 800W only)
Weights: See dimensions drawing

ELECTRICAL

120-277VAC or 347-480VAC
Dimming 0-10V, 5ft. blunt end cord, capped at end

FEATURES

High luminous efficacy - Up to 150 Lm/W
Instant illumination and restrike. No warm-up time required
5 year warranty

Product comes standard with:

Junction Box (Factory Installed)
Dimming (0-10V, 5ft. Blunt-End Cable)
10ft. Blunt-End Power Cord

PERFORMANCE

Source	Voltage (VAC) 50/60Hz	Input Current (A)	Wattage (W)	CCT	Lumen Output* (Lm)
L1	120-277	1.67-0.81	200W	3,000K	30,000
				4,000K	
	347-480	0.58-0.42		5,000K	
				5,700K	
L2	120-277	3.34-1.62	400W	3,000K	60,000
				4,000K	
	347-480	1.16-0.84		5,000K	
				5,700K	
L3	120-277	5.01-2.43	600W	3,000K	90,000
				4,000K	
	347-480	1.74-1.26		5,000K	
				5,700K	
L4	120-277	6.68-3.24	800W	3,000K	100,000
				4,000K	
	347-480	2.32-1.68		5,000K	
				5,700K	

*Nominal values

ACCESSORIES (Ordered Separately, Factory Installed)
SP01: 10KV Surge Protector for 120-277V **SP02:** 10KV Surge Protector for 347-480V **WG06:** Wire Guard* **SC05:** 3ft. Safety Cable Kit* * Can be field installed

LDPI® is a registered trademark of LDPI, Inc. © LDPI, Inc.

Product design and specifications subject to change without notice.
Visit www.ldpi-inc.com for the most current version and photometric data. v.04.28.21

LEHB1

HIGH TEMP. LED HIGH BAY

Foundries • Steel Mills • Pulp/Paper Mills • Shipyards • Aircraft hangars • Heavy Industrial

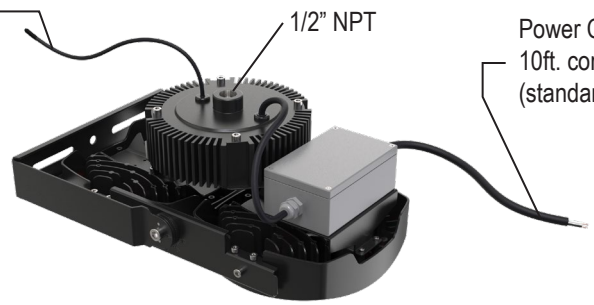

200W Standard Fixture Shown

DIMENSIONS / WEIGHTS

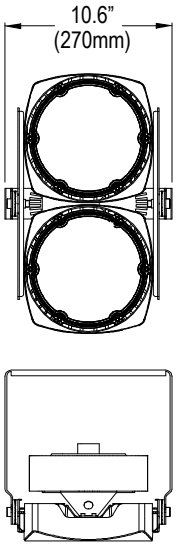

200W
17.9 lbs.

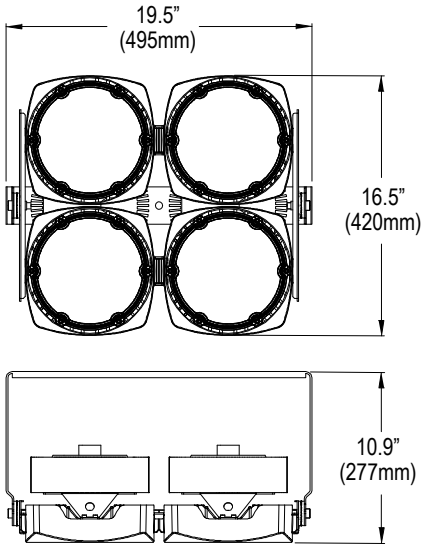

400W
35.2 lbs.

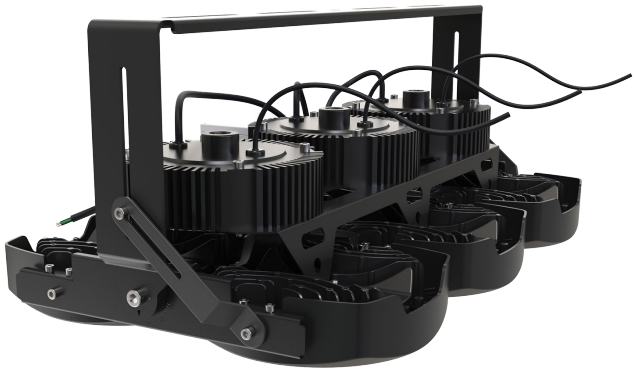

600W shown with anti-vibration brackets
(Included on 600W & 800W models)
(Must be field installed)

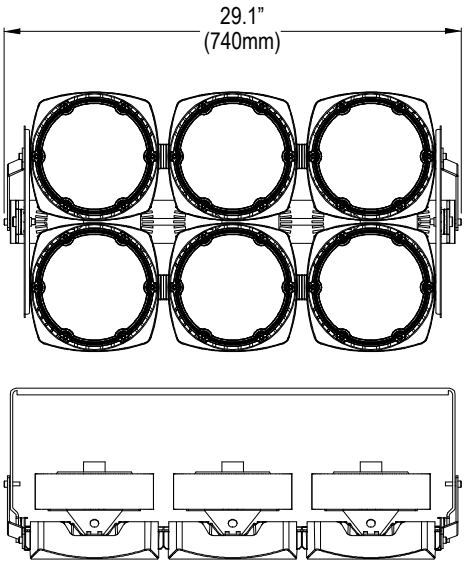

600W
56.9 lbs.

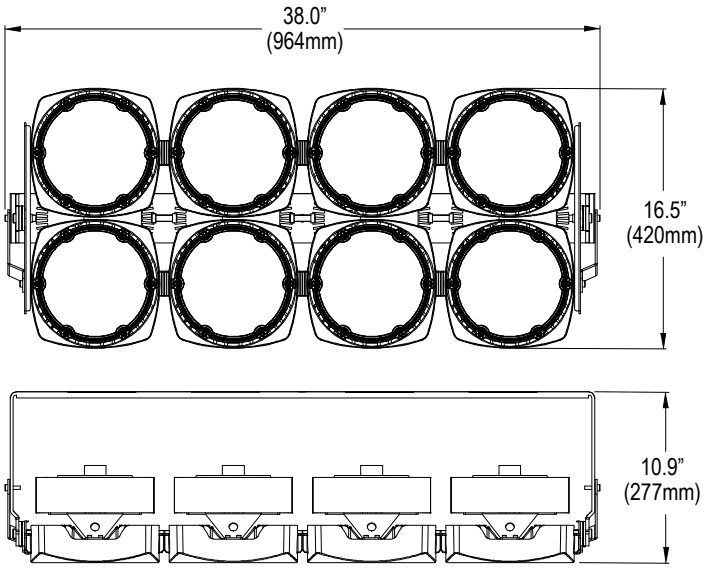

800W
73.9 lbs.

LDPI® is a registered trademark of LDPI, Inc. © LDPI, Inc.

Product design and specifications subject to change without notice.
Visit www.ldpi-inc.com for the most current version and photometric data. v.04.28.21

LEHB1

HIGH TEMP. LED HIGH BAY

Foundries • Steel Mills • Pulp/Paper Mills • Shipyards • Aircraft hangars • Heavy Industrial

MOUNTING

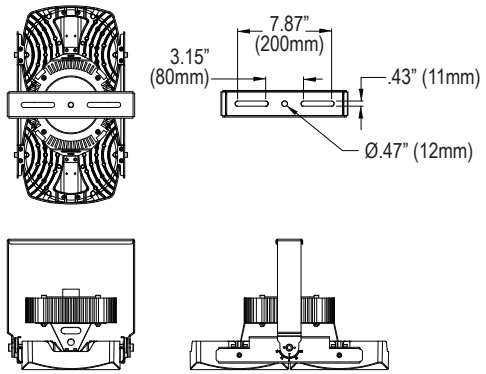

200W

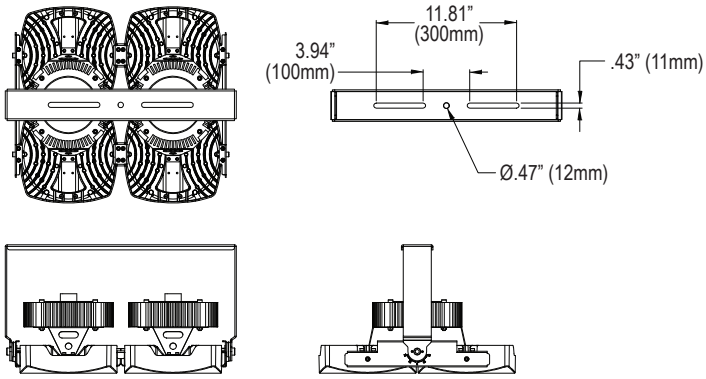

400W

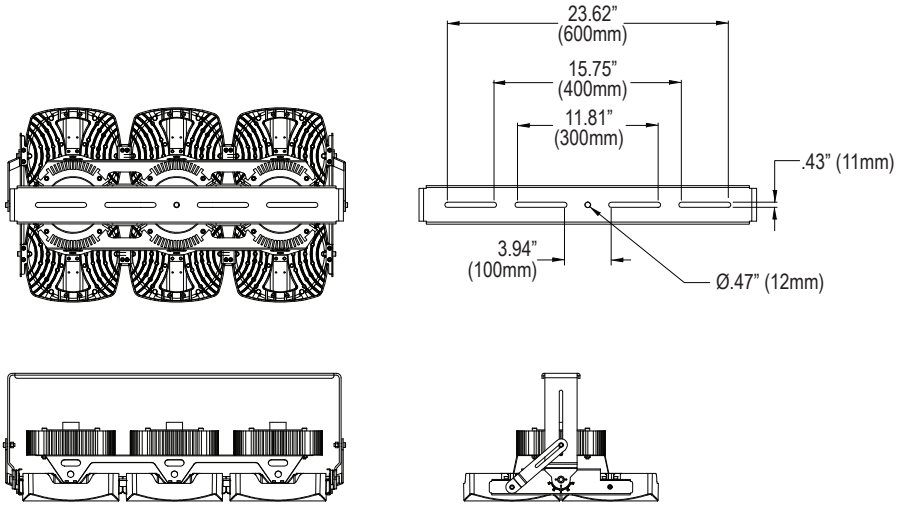

600W

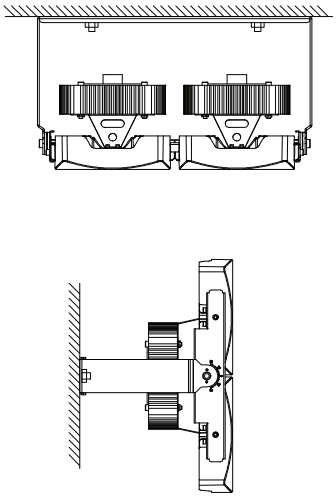

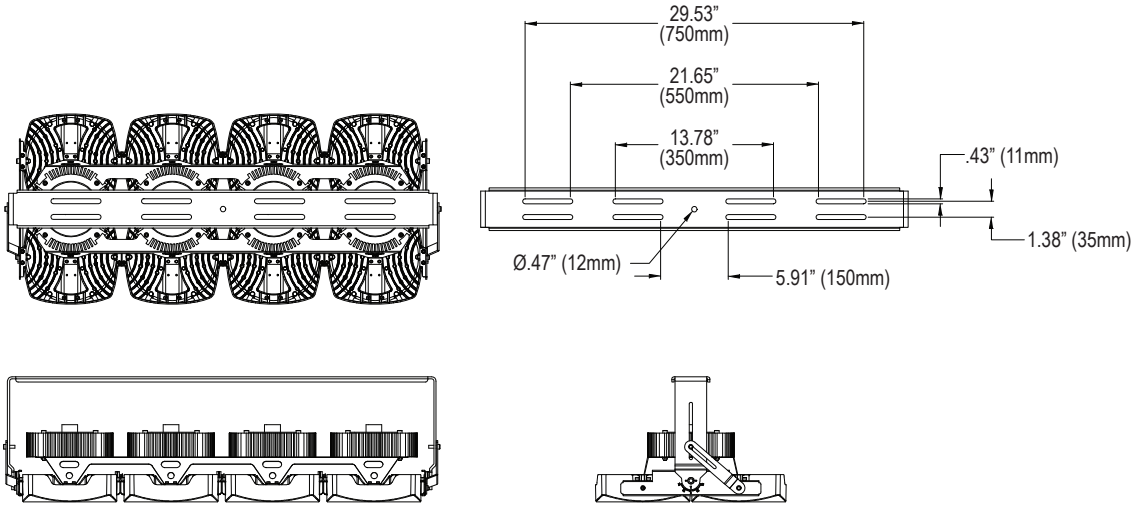

800W

LDPI® is a registered trademark of LDPI, Inc. © LDPI, Inc.

Product design and specifications subject to change without notice.
Visit www.ldpi-inc.com for the most current version and photometric data. v.04.28.21