CRENSHAW

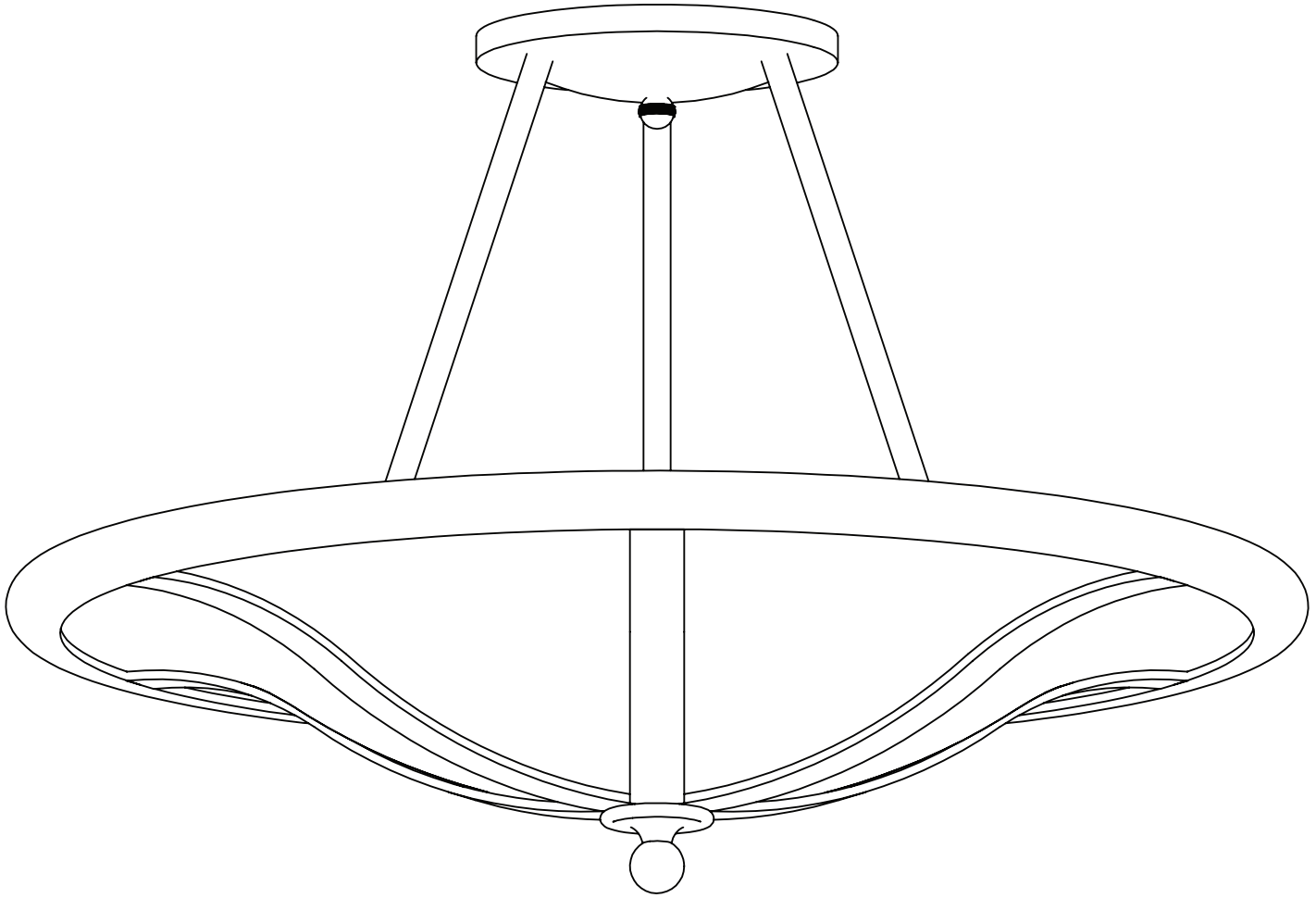

Bowl Pendant
#3971-PBCx

Finish: Per order
Lens: Slumped acylic or glass, per order
Width: 18″
Height: 12″
Lamping: (3) 25W candelabra, or per order
Location: Dry

Idea Book fixtures may be used as shown or as the basis for new custom designs. Dimensions, materials, lamping, and other design elements may be modified as needed.

All Crenshaw fixtures UL or CSA listed unless otherwise noted. All fixtures lab tested and certified to comply with ballast, driver, and component manufacturer warranties.

Designs are the sole property of Crenshaw Lighting and may not be conveyed to third parties without express written consent.