CRENSHAW

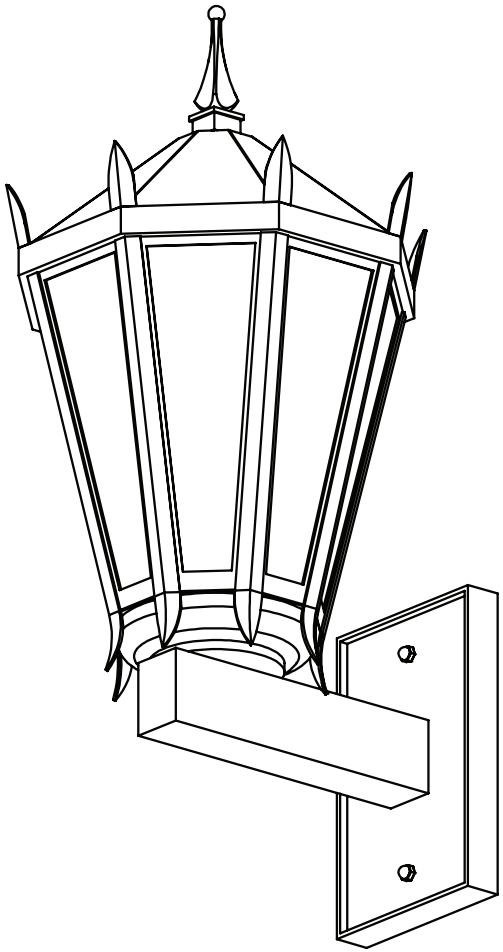

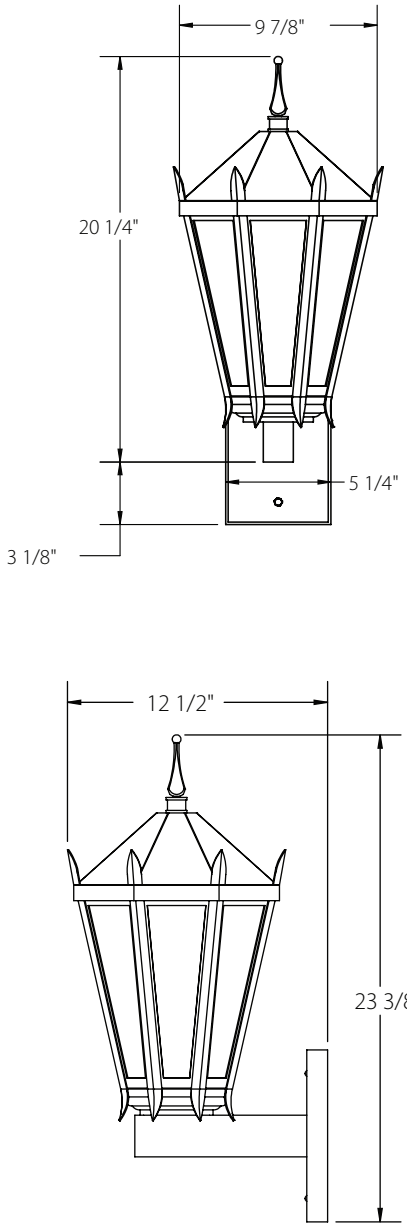

Bracket Sconce
#13078-WAC

Finish: Per order
Lens: Per order
Width: 9-7/8"
Height: 23-3/8"
Extension: 12-1/2"
Lamping: Per order
Location: Wet

Idea Book fixtures may be used as shown or as the basis for new custom designs. Dimensions, materials, lamping, and other design elements may be modified as needed.

All Crenshaw fixtures UL or CSA listed unless otherwise noted. All fixtures lab tested and certified to comply with ballast, driver, and component manufacturer warranties.