CRENSHAW

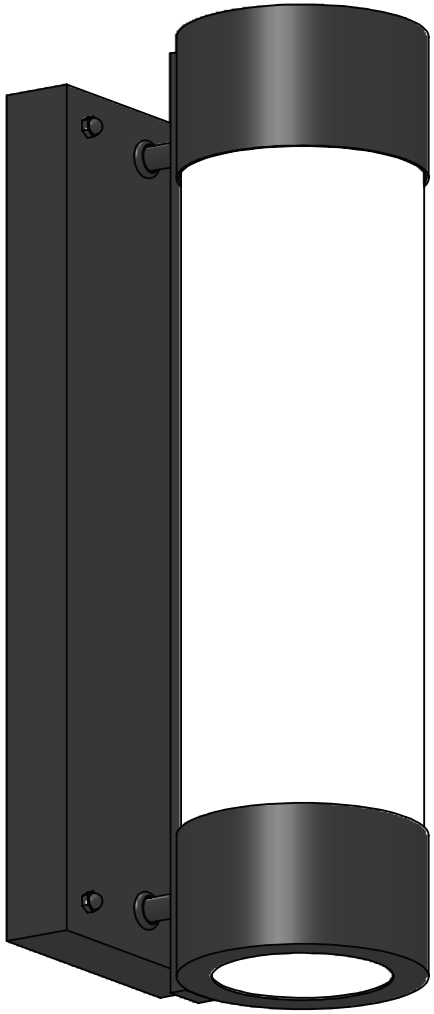

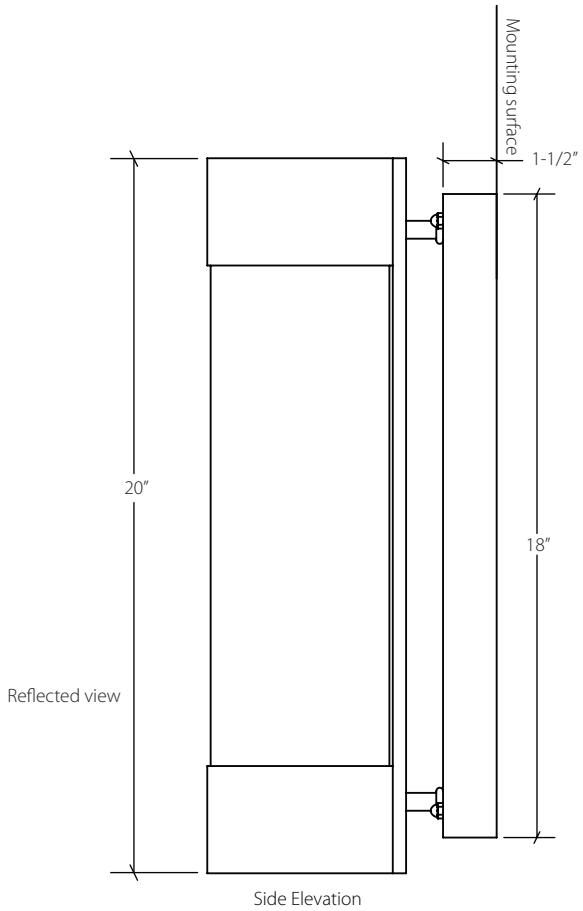

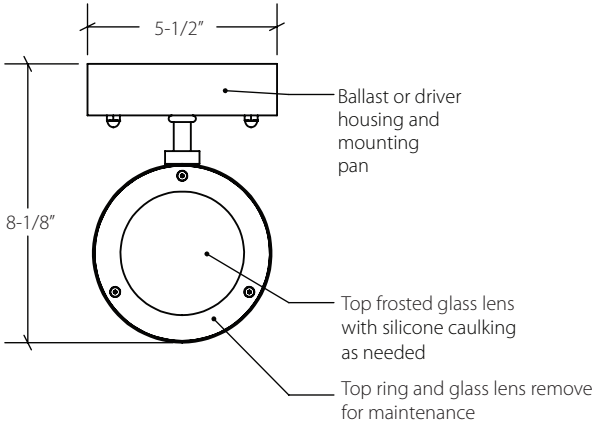

Bracket Sconce
#14710-WBC

Finish: Per order
Lens: 5" White Acrylic cylinder
Width: 5-1/2"
Height: 20"
Extension: 8-1/8"
Lamping: Per order
Location: Dry, damp, or wet
Notes: For wet location, some lamping specifications may include listing fees.

Idea Book fixtures may be used as shown or as the basis for new custom designs. Dimensions, materials, lamping, and other design elements may be modified as needed.

All Crenshaw fixtures UL or CSA listed unless otherwise noted. All fixtures lab tested and certified to comply with ballast, driver, and component manufacturer warranties.

Designs are the sole property of Crenshaw Lighting and may not be conveyed to third parties without express written consent.