CRENSHAW

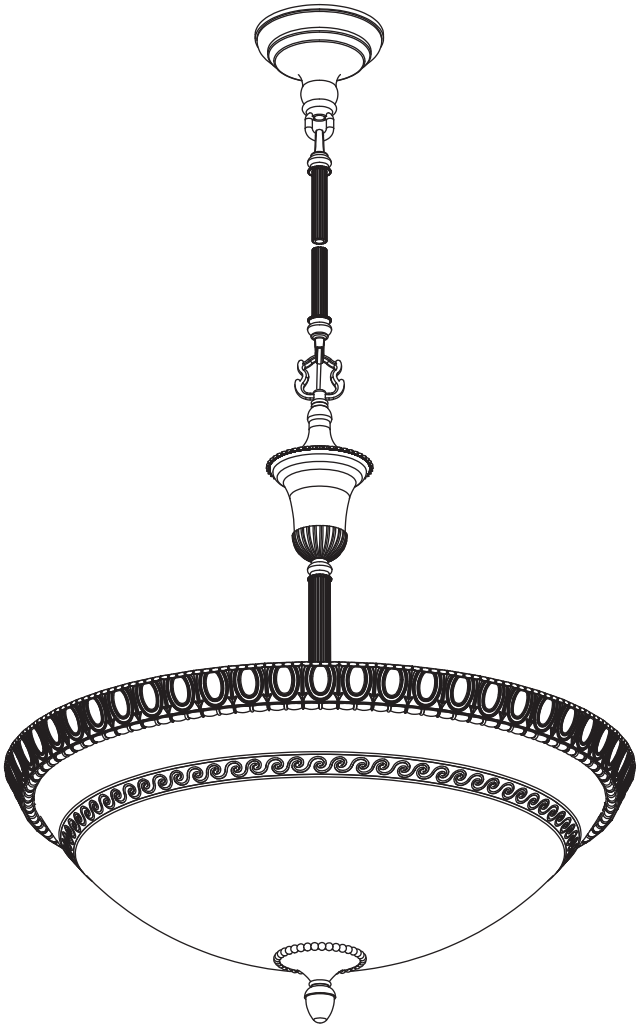

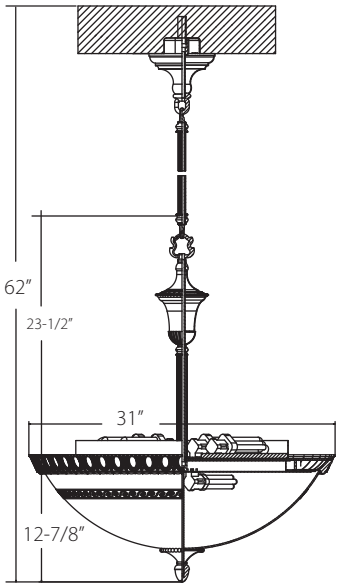

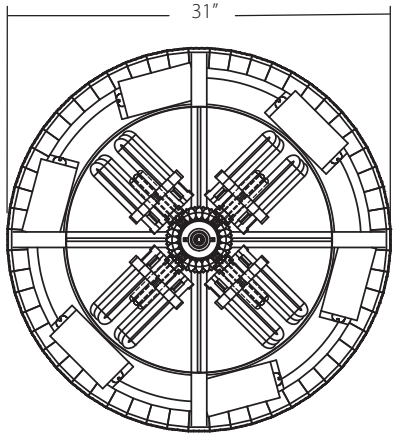

Historic Egg & Dart Bowl
Pendant
#3726-PBC2x

Finish: Aged Brass
Lens: Flashed Opal Glass with Custom Ceramic Glaze Wave Pattern
Width: 31″
Height: 12-7/8″
Crown: 23-1/2″
Lamping: (4) 18W QBX + (8) 42W TBX uplighting
Suspension: Stem
Location: Dry

Idea Book fixtures are presented as design inspiration and may be used as the basis for new custom lighting. Exact replication of this original design is restricted.

All Crenshaw fixtures UL or CSA listed unless otherwise noted. All fixtures lab tested and certified to comply with ballast, driver, and component manufacturer warranties.

Designs are the sole property of Crenshaw Lighting and may not be conveyed to third parties without express written consent.