CRENSHAW

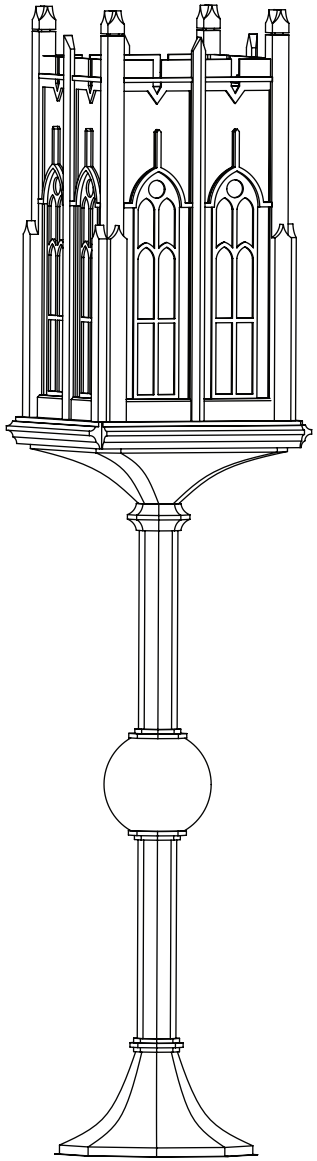

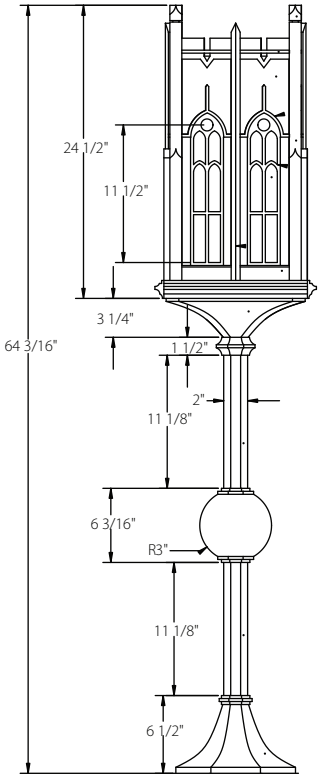

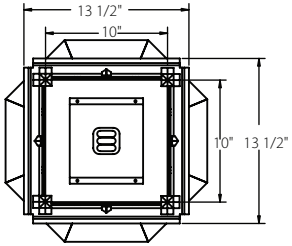

Post Lantern
#3417-SECx

Finish: Hammered Bronze
Lens: Faux Alabaster acrylic
Width: 13-1/2 ″
Height: 64-3/16″
Lamping: (1) 26W TBX CFL
Location: Dry

Idea Book fixtures are presented for design inspiration. Exact duplication of this original design is restricted.

All Crenshaw fixtures UL or CSA listed unless otherwise noted. All fixtures lab tested and certified to comply with ballast, driver, and component manufacturer warranties.

Designs are the sole property of Crenshaw Lighting and may not be conveyed to third parties without express written consent.