MOBY P 3.1

designplan

datasheet

The Moby P series are surface mounted spotlights suitable for underwater applications ONLY which blend green and blue LED colors to create chromotherapy or scenographic effects. It is available in white, RGBW or shades of Cyan with 3 different sizes and wattages and 4 optics options.

Intertek

IPS

NTC

TECHNICAL DATA

Wattage / Input	30W (24VDC)
Power Supply	Remote, not included. See page 2.
Construction	Body: Thermally Conductive Plastic Trim: Glass Bracket: AISI 316L Stainless Steel Lens: Tempered, Extra-Clear Glass (0.47” thick)
CCT	2700K, 3000K, 4000K, RGBW, Shades of Cyan
CRI	CRI >80
Delivered Lumens	1876 lm (3000K, 34°); RGBW: 1090 lm (3000K, 34°) (R) 171 lm, (G) 319 lm, (B) 87 lm, (W) 513 lm Cyan: 961 lm (34°)
Efficacy	62.5 lm/W RGBW: 36.3 lm/W Cyan: 32.0 lm/W
Optics	4 Standard (see below)
Finishes	Glass
Fixture Dimensions	Ø7.60” x 4.25” l x 8.50” h
Fixture Weight	7.19 lbs
LED Source	5 Power LED Group RGBW: 5 Power LED RGBW Group Cyan: 5 Power LED Cyan Group
Lumen Maintenance	L90, B10 >50,000hrs (Ta 25°C)
Color Consistency	2-Step MacAdam
Operating Temp.	-4°F to +113°F
IP Rating	IP68
IK Rating	IK10

Fixture Dimensions

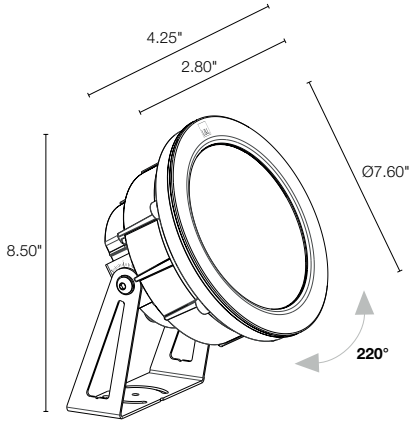

FOR UNDERWATER USE ONLY
Max Submersion Depth 32.8’

ORDERING INFORMATION

Example: MP31009WV. Accessories / Power Supplies ordered separately.

MP3100			V
Model No.	**CCT**	**Optics**	**Finish**
MP3100	**F** - 2700K **5** - 3000K **9** - 4000K **7** - RGBW **Y** - Shades of Cyan	**S** - 22° **M** - 34° **L** - 62° **W** - 31°x64°	**V** - Glass

Job Name/Date:

Fixture Type Designation:

sales@designplan.com
www.designplan.com

79 Trenton Avenue, Frenchtown NJ 08825

P: 908-996-7710
F: 908-996-7042

© Copyright 2019 Designplan Lighting, Inc.

Published: October 21, 2021

SUGGESTED POWER SUPPLIES

STATIC WHITE - 24VDC (FOR USE WITH FOUNTAIN / WATER FEATURES)

Part Number	Description	Input/Output	# of Fixtures
FPV-100000024	Non-Dim	120-277VAC to 24VDC, 100W, Class 2	1-2
FPV-100100024	0-10V Dimming to 1.0%	120-277VAC to 24VDC, 100W, Class 2	1-2

RGBW / CYAN - 24VDC (FOR USE WITH FOUNTAIN / WATER FEATURES)

Part Number	Description	Input/Output	# of Fixtures
FPV-100EL0024	DMX / RDM (Field Addressable) / DALI	120-277VAC to 24VDC, 100W	1 - 2

For other power supply options consult factory.

ACCESSORIES

Anti-Glare

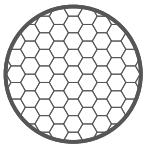

WH0403
Honeycomb Louvre
**Order together with lighting fixture*

Job Name/Date:

Fixture Type Designation:

© Copyright 2019 Designplan Lighting, Inc.
Published: October 21, 2021

PHOTOMETRIC DATA

Note all photometry in 3000K, CRI 80

S - 22°

H (ft)	Ø (ft)	Fc max (3000K)
3.28'	1.28'	924.3
6.56'	2.56'	231.0
9.84'	3.84'	102.7
13.12'	5.12'	57.8
16.40'	6.43'	37.0

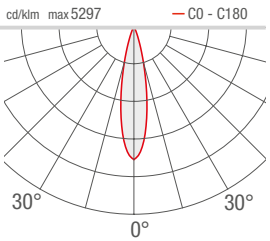

M - 34°

H (ft)	Ø (ft)	Fc max (3000K)
3.28'	1.97'	418.6
6.56'	3.94'	104.6
9.84'	5.94'	46.5
13.12'	7.91'	26.2
16.40'	9.88'	16.7

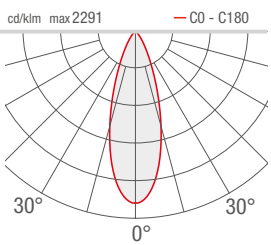

L - 62°

H (ft)	Ø (ft)	Fc max (3000K)
3.28'	4.00'	149.9
6.56'	7.97'	37.4
9.84'	11.98'	16.6
13.12'	15.94'	9.4
16.40'	19.95'	6.0

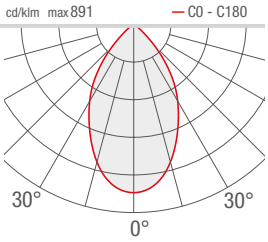

W - 31°x64°

H (ft)	Ø (ft)	Ø (ft)	Fc max (3000K)
3.28'	1.84'	4.13'	197.8
6.56'	3.67'	8.23'	49.4
9.84'	5.54'	12.37'	22.0
13.12'	7.38'	16.50'	12.4
16.40'	9.22'	20.64'	7.9

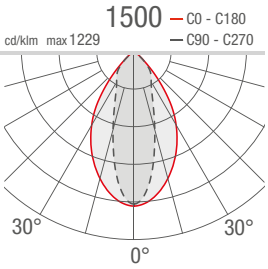

Job Name/Date:

Fixture Type Designation:

© Copyright 2019 Designplan Lighting, Inc.

Published: October 21, 2021