REBELLE
ARCHITECTURAL
LIGHTING

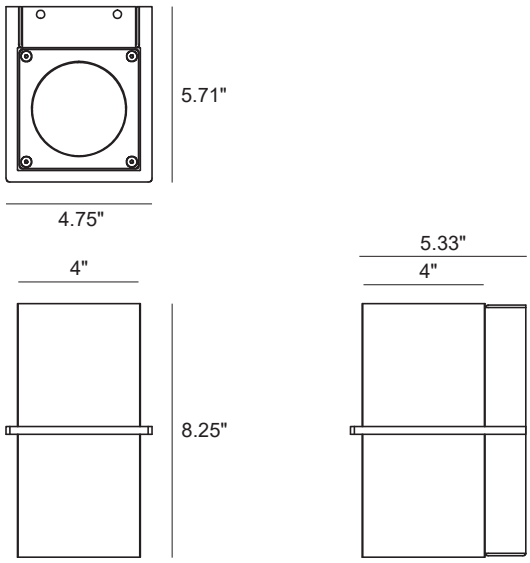

Tessera 3203LED Up/Down Wall Mount Lighting

INTERIOR/EXTERIOR

MODEL	LED MODULE		COLOR TEMPERATURE		VOLT	DISTRIBUTION - UP		DISTRIBUTION - DOWN		ACCENT PLATE		OPTIONS		COLOR	
3203	1 x 12L[5]	*1 x 12 watts[1] 1219 lumens[2]*	40*	*4000K*	120*	SP	*19° spot*	SP	*19° spot*	0	*no accent plate*	DIM[4]	*0 - 10 volt dimming*	WT	*white texture*
	2 x 12L	*2 x 12 watts[1] 2438 lumens[2]*	35	*3500K*	208	FL	*30° flood*	FL	*30° flood*	1(_)	*painted plate (specify finish, std paint to match)*	90	*90 CRI*	BT	*black texture*
			30	*3000K*	240	WFL	*45° wide flood*	WFL	*45° wide flood*					SM	*silver metallic*
	1 x 9L[5]	*1 x 9 watts[1] 930 lumens[2]*	27	*2700K*	277	VWFL	*94° very wide flood*	VWFL	*94° very wide flood*					AN	*aluminum natural*
	2 x 9L	*2 x 9 watts[1] 1860 lumens[2]*				PB	*pencil beam[5] 8 watts[1] 3000K and 4000K only*	T3	*type III optic[3]*					BZ	*bronze*
								PB	*pencil beam[5] 8 watts[1] 3000K and 4000K only*	2	*copper plate*			GM	*gunmetal*
										3	*stainless steel plate*			WS	*white satin*
														BM	*black matte*
														RAL	*specify no.*

**Standard configuration unless otherwise specified*

[1]Nominal LED Power [2]Delivered lumens (4000K, 80CRI), not applicable to PB
[3]See Tessera 3101 specification sheet for details [4]Not available with pencil beam optic
[5]Pencil beam LED module has a nominal LED power of 8 watts, replaces COB LED module watts. Not available in 347 volt.
***If ordering single module specify whether up(U) or down(D) distribution is desired ie. 3203-1x12L-40-120-FL(D)-0-WT*

SAMPLE CATALOG NUMBER: 3203 - 2 x 12L - 40 - 120 - SP - SP - 1(WT) - WT

Using this catalog number would order 1 model 3203 wall mount luminaire using 2 - 12 watt LED modules with spot optics for the up and down distribution with a color temperature of 4000K wired to 120 volts, painted white texture polyester powder coat with the decorative accent plate painted to match the luminaire.

CONSTRUCTION

Materials
All aluminum construction, stainless steel tamper resistant hardware, acrylic lens.

Electrical Components
Constant current driver 350mA or 250mA, Luxeon COB with Zhaga compliant socket, 80 CRI standard. Pencil beam uses a proprietary PCB with constant current driver 2080mA. Optional dimming driver compatible with IEC60929:2006 0-10V ballast controls.

MOUNTING

The 3203LED series is designed for wall mounting. A heavy gauge mounting plate is secured to the wall and mounted independently of the recessed 4" octagon j-box (by others). The main housing hooks on to the mounting plate and is secured by two stainless steel set screws. For outdoor applications silicone seal is required across the top and down the sides between the housing and mounting surface. Maximum fixture weight 9 lbs.

OPTICAL

The 3203LED luminaire uses Chip-on-Board technology with Zhaga Book 3 compliant socket, field changeable high efficiency twist lock reflectors and clear acrylic lens. Pencil beam optic is a fixed optic (FWHM 7° x 55°) mounted to a proprietary PCB.

PROTECTION

The 3203LED series is listed for use in wet locations to UL and CSA Standards. Reported L70 (10k) >55,000 hours per TM-21. Calculated L70 >100,000 hours at 45°C ambient. IP65 rated.

© 2018 REBELLE All rights reserved. R18.1 Specifications subject to change without notice.

REBELLE
ARCHITECTURAL
LIGHTING

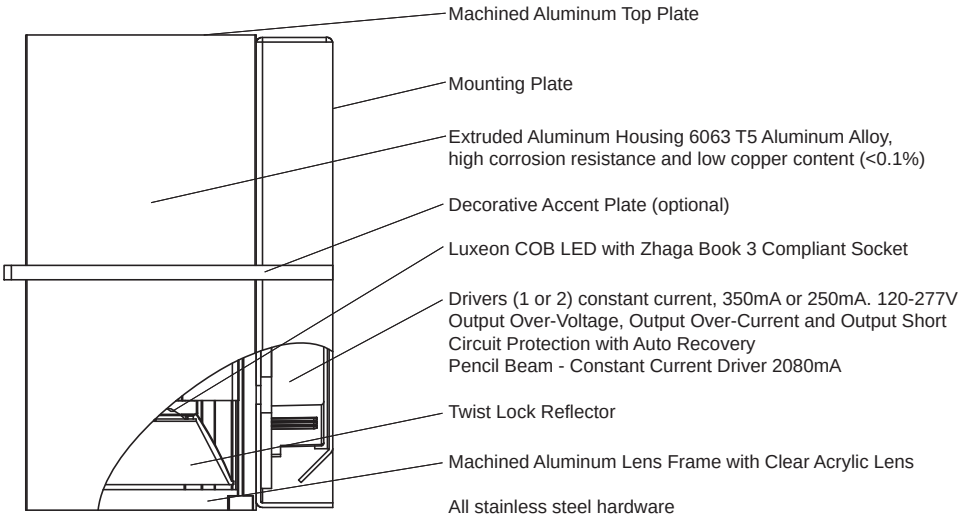

Tessera 3203LED

VWFL (94° Very Wide Flood Optic)*

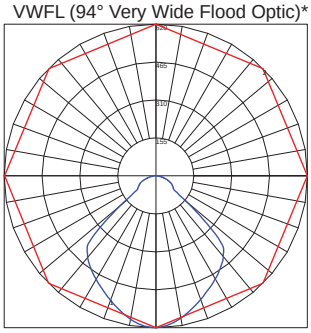

WFL (45° Wide Flood Optic)*

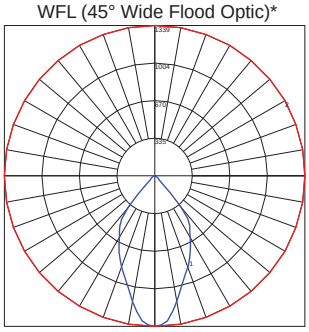

FL (30° Flood Optic)*

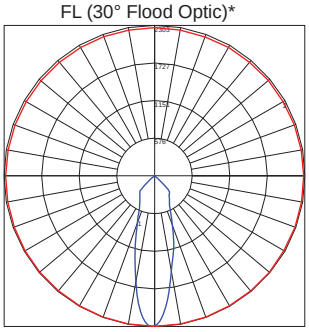

SP (19° Spot Optic)*

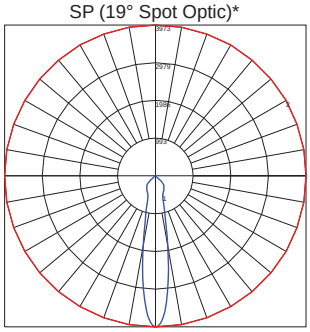

*Based on 12L down only

Product	CCT	CRI	Delivered Lumens	Nominal LED Power	System Power	Lumens per Watt*
3203-2x12L	4000	80	2438	2 x 12 watts	27.26 watts	89.4
3203-1x12L	4000	80	1219	1 x 12 watts	13.63 watts	89.4
3203-2x9L	4000	80	1860	2 x 9 watts	19.28 watts	96.5
3203-1x9L	4000	80	930	1 x 9 watts	9.64 watts	96.5

Lumen Multipliers	3500K - 0.962	3000K - 0.944	2700K - 0.923	90 CRI - 0.842

*Based on system power.

© 2018 REBELLE All rights reserved. R18.1 Specifications subject to change without notice.