4" VersaLux LED Pendant

LED

Linear LED Low Profile Direct Pendant Flush Snap-in Lens

PD4-LO

Job Name

Fixture Type

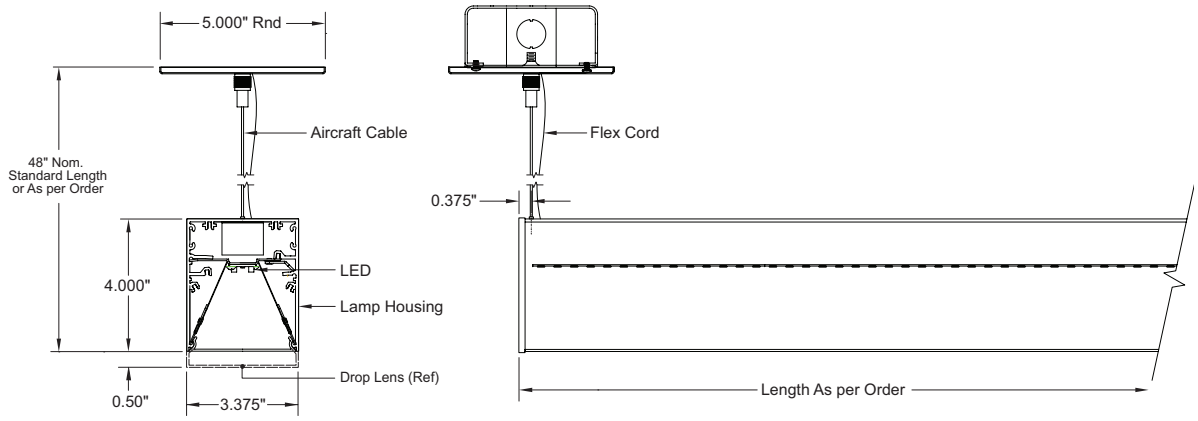

PD4-LO-					-	-W
CRI	**Color**	**Output**	**Dimming**	**Lens**	**Length(")**	*(Finish)*
8 80+ **9** 90+	**27** 2700K **30** 3000K **35** 3500K **40** 4000K **TW** 2700K-6500K	**S** Standard **H** High **M** Maximum *Custom: Specify Lm/Ft* [1]	**S** Std. 0-10V 1% **H** ECO 1% **D** DALI 1% **P** POE [1] **W** Wireless [1]	**DF** Diffuser **D1** Drop 1/2" **BW** Batwing **LW** Louver White **LS** Louver Specular	*Nominal:* **24 36 48** **60 72 84** **96** *(see Page 2)* *Custom:* **Cxxx** *(in inches)*	

Product Code Example: **PD4-LO-830HSD1-C120-W**

Linear low profile direct pendant utilizing high performance LED boards, flush snap-in acrylic lenses and full reflectors.

Features

- Starfire's proprietary EvenGlow™ system provides uniform illumination from end-to-end without lamp imaging, bright spots or shadows at any length
- Fixtures fabricated to any length without custom engineering
- Exceptional lumen per watt efficiency
- High efficiency, low cost, Tunable White option
- High performance snap-in lenses; flush diffusion, flush batwing, or drop with illuminated end caps, plus white or specular louver options
- Combine with welded corner Connectors to form small or large scaled patterns of uniform light

Fixture Specifications

- Housing/Trim: Heavy-duty extruded aluminum
- Finish: White (std), custom available
- Weight: Approx. 3.3 lbs. per linear foot
- UL Listed, (indoor non-condensing)

Electrical

Power consumption: Per specification based on LED configuration

- Input Voltage: 120-277V universal driver
- Ambient operating range: -4 °F to +100 °F
- Integral electronic drivers
- Integral wiring bus between fixture sections
- Drivers with full dimming range at any output choice
- Dimming: 0-10V 1% standard, contact factory for options

Mounting

- Round canopies (std), square available. Consult factory for special ceiling conditions
- Aircraft cable (std), stem optional. Mounting location 0.375" from end of fixture.
- Contact factory for fixture lengths >96"

Options (Consult factory)

- Occupancy sensor, daylight control module
- EM pack (Delivers 800+ total lumens for 90 mins). Specify length and location (+/- 2ft) at time of order

LED Specifications/Photometry: Page 2

[1] Specify – Factory to confirm

STARFIRE LIGHTING, INC.
7 Donna Drive, Wood-Ridge, NJ 07075
starfirelighting.com

P 201.438.9540
F 201.438.9541

All designs and drawings are the property of STARFIRE LIGHTING, INC. We reserve the right to make changes to specifications and approved designs at any time without notice to facilitate manufacturing methods to the extent that such changes do not compromise design integrity. All performance specifications are subject to +/- 10% deviation.

LED Strip

High output edge-to-edge, end-to-end illumination

- Choice of lumen output levels:
  - **S:** Standard
  - **H:** High
  - **M:** Maximum
  - **C:** Custom (between 300 and 1000 Lm/Ft)
- LED Efficiency: Up to 160 Lm/Wt at Maximum output and 180 Lm/Wt at Standard power (at 80+ CRI)
- L70: 50,000+ hours at Maximum output
- 2700K, 3000K, 3500K, 4000K and Tunable White: 2700K-6500K
- CRI: 80+ or 90+
- Color Consistency: Equal or better than 3 SCDM with chip mixing
- 5 year limited warranty*

Fixture Dimensions

Fixture Overall Length

Nominal	Actual
24"	23.5"
36"	34.5"
48"	45.5"
60"	56.5"
72"	72"
84"	84"
96"	95"

Fixture Length Example:

For a nominal 36" length (34.5" exact): enter **36**

To order an exact 36" length: enter **C36**

Consult factory for fixture installation dimensions

Diffuser

80 CRI		4000K		3500K		3000K		2700K	
Output Setting	**Lm/Ft**	**Wt/Ft**	**Lm/Wt**	**Wt/Ft**	**Lm/Wt**	**Wt/Ft**	**Lm/Wt**	**Wt/Ft**	**Lm/Wt**
S Standard	**500**	3.89	128	3.97	125.9	4.14	120.8	4.69	106.7
H High	**750**	6.09	123.1	6.22	120.5	6.5	115.4	7.5	100
M Maximum	**1000**	8.5	117.7	8.68	115.2	9.09	110.1	10.71	93.3

Performance for nominal 4 foot length or greater (Std. 6ft)

Diffuser

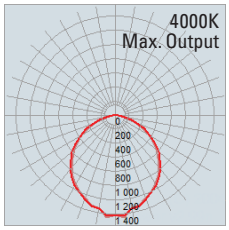

1/2" Drop Lens

80 CRI		4000K		3500K		3000K		2700K	
Output Setting	**Lm/Ft**	**Wt/Ft**	**Lm/Wt**	**Wt/Ft**	**Lm/Wt**	**Wt/Ft**	**Lm/Wt**	**Wt/Ft**	**Lm/Wt**
S Standard	**500**	3.7	133.6	3.8	130.9	4.0	125.6	4.5	111.2
H High	**750**	5.8	128.2	6.0	125.6	6.2	120.3	7.2	104.5
M Maximum	**1000**	8.1	122.9	8.3	120.2	8.7	114.9	10.2	97.8

Performance for nominal 4 foot length or greater (Std. 6ft)

1/2" Drop

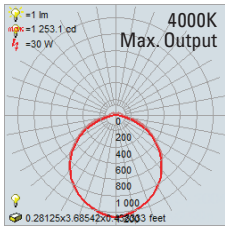

Batwing

80 CRI		4000K		3500K		3000K		2700K	
Output Setting	**Lm/Ft**	**Wt/Ft**	**Lm/Wt**	**Wt/Ft**	**Lm/Wt**	**Wt/Ft**	**Lm/Wt**	**Wt/Ft**	**Lm/Wt**
S Standard	**500**	4.1	122.2	4.2	119.8	4.4	114.9	4.9	101.3
H High	**750**	6.4	116.8	6.6	114.4	6.8	109.5	7.9	94.7
M Maximum	**1000**	9.0	111.5	9.2	109.1	9.6	104.2	11.4	88.0

Performance for nominal 4 foot length or greater (Std. 6ft)

Batwing

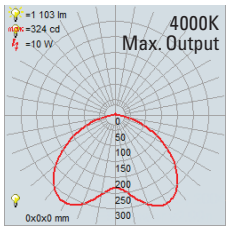

* See Starfire website for Product Limited Warranty

STARFIRE LIGHTING, INC.
7 Donna Drive, Wood-Ridge, NJ 07075
starfirelighting.com

P 201.438.9540
F 201.438.9541

All designs and drawings are the property of STARFIRE LIGHTING, INC. We reserve the right to make changes to specifications and approved designs at any time without notice to facilitate manufacturing methods to the extent that such changes do not compromise design integrity. All performance specifications are subject to +/- 10% deviation.