VersaLux™ Series VA

ARCHITECTURAL LIGHTING SERIES

Job Name: Fixture Type:

Accentlight, Open Aperture Extendable Lampholder

MR16 LED

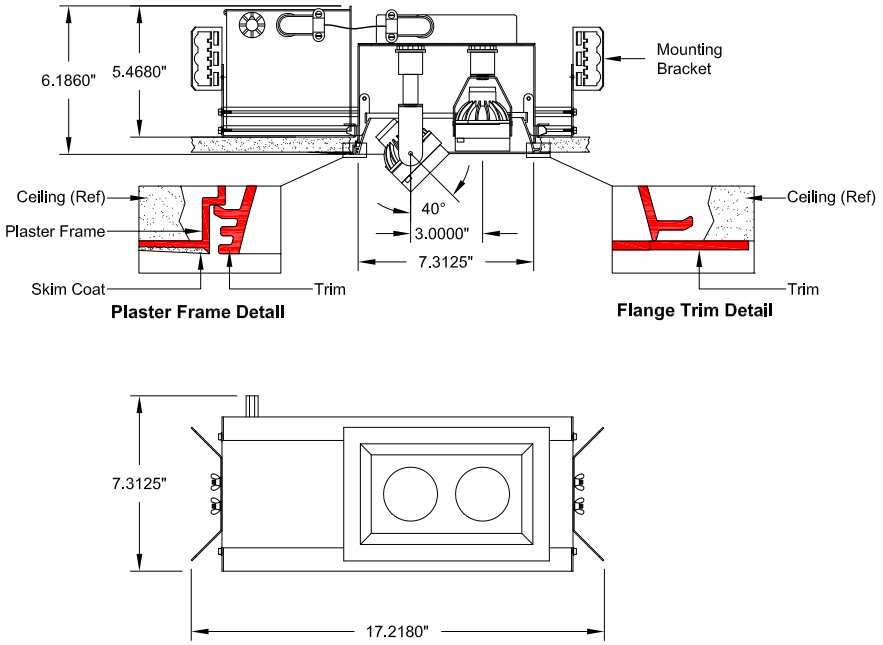

Ceiling Cut-out : 5.0000" x 8.0000"

Trim Flange : 5.5625" x 8.5625"

Aperture: 4.3125" x 7.3125"

_____-2-L6 _____-_____/B-EX-_____

Trim Type — Wattage — Trim Finish — Voltage

Trim Type	Wattage	Trim Finish	Voltage
☐ VAP Plaster	Consult factory for Lamp to Transformer/Driver compatability	☐ W White	☐ 1 (120V)
☐ VAF Flange		☐ B Black	☐ 2 (277V)

Description

Recessed open aperture accent fixture. Adjustable and extendable lampholders. Extends 1.25" below aperture. Two MR16 LED lamps. Flanged or plaster frame trim.

Features

- Below ceiling access to the transformer/ driver and wiring.
- Lampholders are adjustable from 0°-40°.
- Plaster frame trim provides 0.062" reveal to minimize skim coat cracking.
- Integral Thermal Protection.

Fixture Specifications

Dimensions: 17.218"L x 7.312"W x 5.468"H
Weight: Approx.12 lbs.
Ceiling Cutout: 8"L x 5"W

Electrical

- Ambient temperature 100 °F. maximum.
- Integral toroidal transformer/driver.
- Through branch wiring capable.

Mounting

Universal mounting brackets included.
Contact factory for special ceiling conditions.

Photometry: Consult factory

All designs and scaled drawings shall remain the property of STARFIRE LIGHTING, INC., and may not be reproduced or transmitted without expressed written consent. STARFIRE LIGHTING, INC. reserves the right to make changes on approved designs to facilitate manufacturing methods to the extent that such changes do not compromise design integrity.

starfire Starfire Lighting, Inc. 7 Donna Drive, Wood-Ridge, NJ 07075 P: 201.438.9540 F: 201.438.9541 www.starfirelighting.com