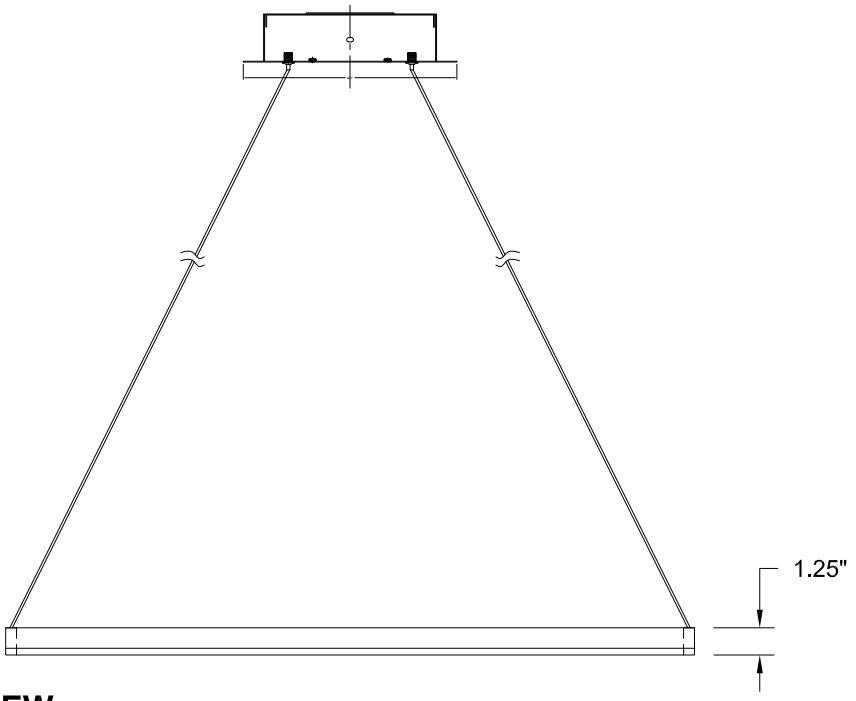

FRONT VIEW

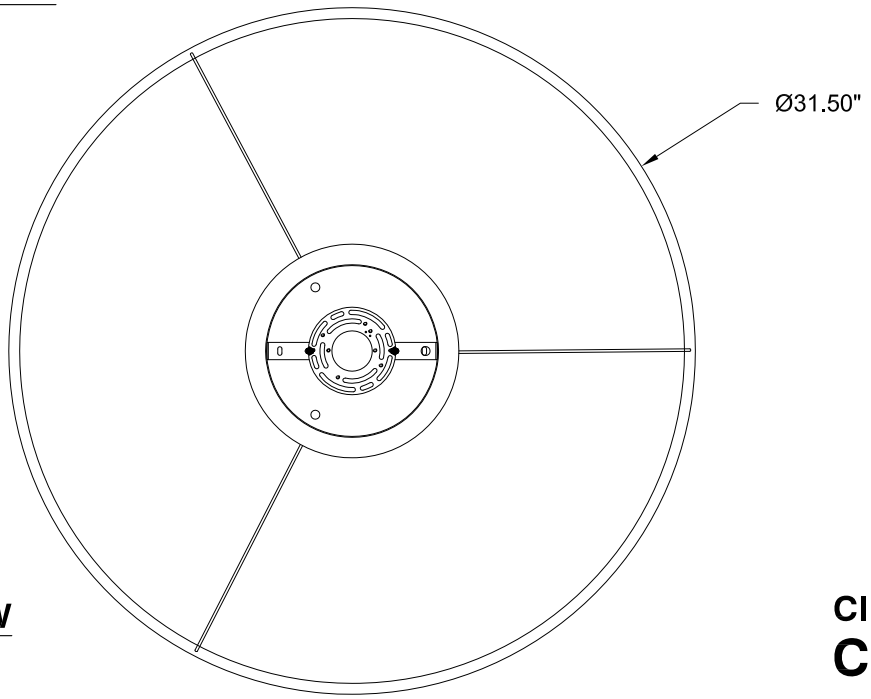

TOP VIEW

CIRCULO pendant

CDX-3323

OXYGEN LIGHTING ©

LAMPING
- o CRI>90
- o 4000K
- o Est Delivered Lumens: 4408 lm

DRIVER (Dimmable)
- o 1800mA - 76W Output
- o 0-10v dimming driver

METAL FINISH
- o Red

DIFFUSER
- o Matte White Acrylic

INPUT VOLTAGE
- o 100-277V, 50/60Hz

DIMENSIONS
- o 31.50" (dia.) x 1.25" (h)
- o Hanging height adjustable with 8ft. cables

INSTALLATION
- o 4" Octagonal J-Box
- o ETL Dry Listed
- o ADA
- o Conforms to UL STD 1598
- o Certified CAN/CSA STD C22.2 No. 250.0

oxygen

OXYGEN LIGHTING
201 RAILHEAD RD, FORT WORTH, TX 76106
TEL. (877) 607-0202 FAX (877) 607-0203
WWW.OXYGENLIGHTING.COM

PROJECT: _____

DATE: _____