CM-LT562S

120V LED Canopy Mounted
Track Lighting - Small

Catalog #		Type
Project		
		Date
Prepared by		

The CM-LT562 series is a high-output LED luminaire that features an adjustable head allowing the optimum positioning of light within a 90° vertical head rotation and a 360° horizontal rotation. It has a modern cylindrical design with no exposed wiring and no separate power supply housing. It is made from premium die-cast aluminum. Available in black or white finish and muitple optics for different beam angles.

120V AC | TRIAC DIMMABLE | 3SDCM | 360° | 90° | DRY INDOOR | L70 50,000 HOURS | 5 YEAR WARRANTY | Intertek

SPECIFICATIONS

INPUT VOLTAGE	120V AC 50/60Hz, 0.18A
WATTAGE	12 W
LUMENS	840 Lm @4000K
CRI	90+
BEAM ANGLE	15º, 24º, 38º
DIMMING [1]	TRIAC Dimming
DIMENSIONS	2 ½"Ø x 4 3/8" L x 6 ½" Ext. (63.5 x 111 x 165 mm)
HORIZONTAL AIM	360°
VERTICAL AIM	90°
ENVIRONMENT	Indoor - Dry
CERTIFICATIONS	cETLus
LUMEN MAINTENANCE	50,000 hours
WARRANTY [2]	5 years

[1] Effectively dim down to 10%
[2] See published warranty terms for detailed information

COLOR TEMPERATURE

2700K | 3000K | 4000K | 5000K

Warm White | Neutral White | Cool White

ORDERING INFO

SYSTEM	SERIES	CCT / CRI	BEAM ANGLE	FINISH
CM	LT562S			
CM - Canopy Mounted	LT562S - 2 ½"Ø	2790 - 2700K / 90 CRI	15D - 15°	BK - Black
		3090 - 3000K / 90 CRI	24D - 24°	WH - White
		4090 - 4000K / 90 CRI	38D - 38°	
		5090 - 5000K / 90 CRI		

TEL: 856-234-2211 FAX: 856-234-0881 www.lum-tech.com

TECHNICAL DRAWING

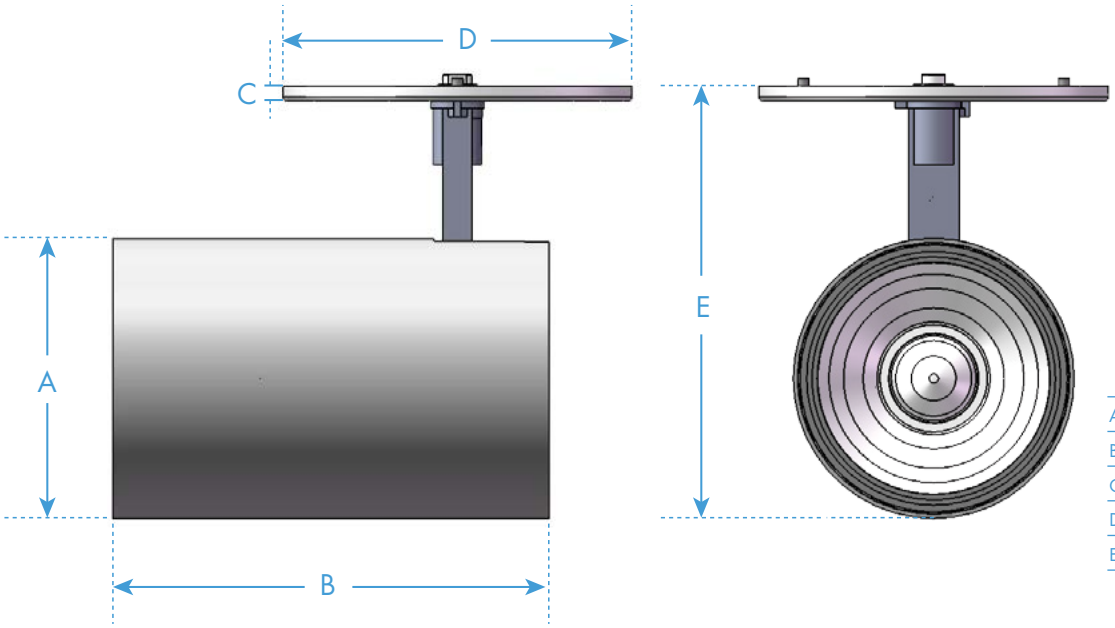

DIMENSIONS		
A	2 ½" Ø	(63.5 mm)
B	4 3/8"L	(111 mm)
C	¼"	(6.35 mm)
D	4 ¾" Ø	(120 mm) above ceiling
E	4 ½" H	(114 mm)

COMPATIBLE DIMMERS

COOPER	SAL06P
LEVITON	6672, 6674, IPL06
LUTRON	TGCL-153PH, LGCL-153PH, MACL-153M, DVCL-153P, CTCL-153P
PASS & SEYMOUR	HCL453P