SPS-0045 REV B

DINO RETRO DESK LAMP

JOB NAME: _____ FIXTURE TYPE: _____

BLE - L - TL001 - _____ - _____ - _____ - _____ - _____

A B C D E

Order Example: BLE - L - TL001 - WHD14 - 705 - ST18 - SBK - 100

A - LAMP SHADE SIZE

DINO:

WHD12	12″ Shade
WHD14	14″ Shade

B - FINISHES

POWDER COAT FINISHES[1]:

100	Black
105	Textured Black
106	Matte Black
200	White
206	Matte White
300	Dark Green
307	Emerald Green
311	Jadite
370	Mint
380	Chartreuse
390	Teal
400	Barn Red
420	Orange
470	Watermelon
480	Blush Pink
490	Magenta
495	Sherbet Orange
500	Buttery Yellow
570	Sunflower
600	Bronze
601	Chocolate
605	Rust
615	Oil-Rubbed Bronze
700	Royal Blue
705	Navy
710	Cobalt Blue
715	Delphite Blue
790	Lavender

B - FINISHES (CONTINUED)

POWDER COAT FINISHES[1]:

800	Industrial Grey
805	Charcoal Granite
810	Graphite
975	Galvanized

C - LAMP STEM LENGTH

ST12	12″ Stem
ST18	18″ Stem

D - CORDS

CSA LISTED CORD OPTIONS:

SBK	Standard Black
SWH	Standard White
CMG	Grey Cotton
CRZ	Red Chevron
CSB	Black Cloth
CSW	White Cloth
CSR	Red Cloth
CSBB	Black & Brown Cloth
CSRW	Red & White Cloth
CSGW	Gold & White Cloth
CSBG	Black & Gold Cloth
CSBW	Black & White Cloth
CSBP	Black & Pink Cloth
CSUW	Blue & White Cloth

E - PLUG FINISH

100	Black
200	White

DIMENSIONAL DRAWING

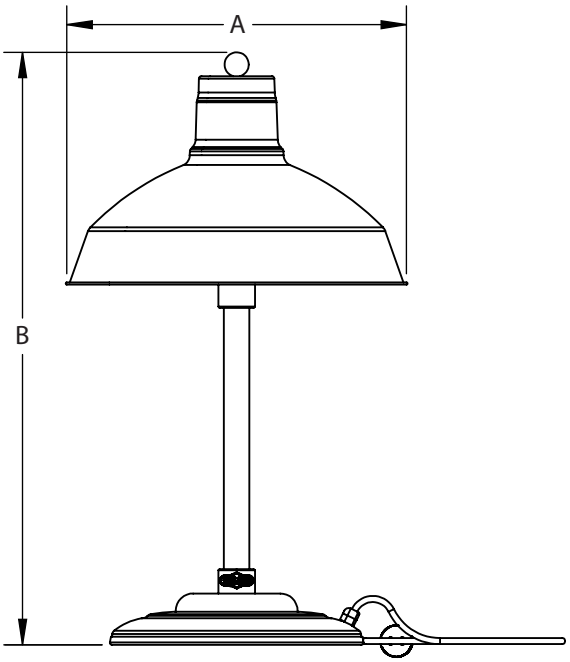

SHADE CODE	DIAMETER (A)	HEIGHT (B)	
		12″ STEM	18″ STEM
WHD12	12″	24.3″	30.3″
WHD14	14″	24.3″	30.3″

IMPORTANT: *(1) All powder coat finished shades, with the exception of 975-Galvanized, feature a white interior*

SPECIFICATIONS

CERTIFICATIONS, LISTINGS & WARRANTY

MADE IN THE USA
Manufactured and Hand-Crafted in Our 60,000 Square Foot Facility Located in Titusville, FL

CSA LISTED FOR DRY LOCATIONS

LIMITED WARRANTY
For Additional Information on Our Limited Warranty, Please See Our Terms & Conditions

CONSTRUCTION & FINISH

POWDER COAT SHADE
Hand-Spun from High Purity 3003-O Temper Aluminum

POWDER COAT FINISHES
Polyester Powder Coat Finishes are Electro-Statically Applied and Thermocured

CONSTRUCTION & FINISH (CONTINUED)

GALVANIZED SHADE
Hand Spun from High Quality Galvanized Steel

CAST IRON WEIGHTED BOTTOM
Features a Cast Iron Weighted Bottom to Prevent Tipping

CORD
Include 6′ of Cord, +/- For Socket Orientation

LIGHT SOURCE

INCANDESCENT
Medium Base E26 Socket, 120 VAC, 60W Max