ST-LED

Correctional **LED** Surface Ceiling

PRODUCT SPECIFICATION

The ST series is designed for use in all levels of correctional facilities and high abuse applications.

Mounting
Surface-mounts to ceilings.

Housing
Die-formed cold rolled steel with seams welded and ground smooth. Stainless steel available.

Door
One piece, die-formed cold rolled steel door with 14 gauge lens retainers and a full length welded pin piano hinge. Stainless steel available.

Internal Lens
Optic Plus lens (standard) completely hides diode image while providing greater than 90% light transmission.

Finish
Polyester powder-coated after phosphate pretreatment for superior adhesion and corrosion resistance. 304 Brushed stainless steel available.

Hardware
Recessed, stainless steel, tamper-proof fasteners.

Driver
0-10Vdc 1% dimming, >0.9 PF, <20% THD
Factory programmable, Operating temp -40°C Min. to 50°C Max

Wiring
Driver provided with pre-wired 3-wire self-aligning input power quick disconnect and 2-wire quick disconnect to LED module.

Certifications
UL Listed damp or wet location. IP54 rated.
Covered ceilings only.

Job Name

Fixture Type

Catalog No.

Approval Date

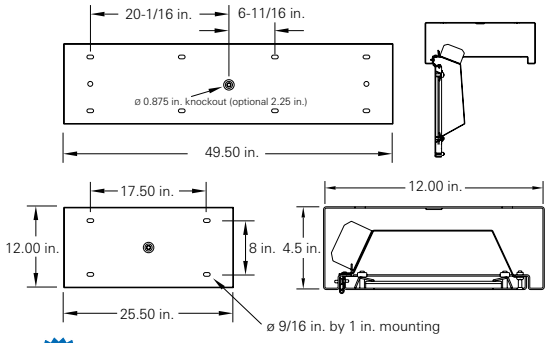

FIVE WARRANTY YEAR · IP54 RATED · W WET · c UL us · MADE IN USA

ST		-			/		-					-		DM	-		/		-					-	
	one		two	three		four		five	six	seven		eight		nine		ten		eleven		twelve	thirteen	fourteen		fifteen

one — Luminaire Size
- 2 — 2 ft fixture
- 4 — 4 ft fixture

two — LED Source
Refer to the LED Source Table on Page 2 for available options.

three — Color Temperature
- 30 — 3000K
- 35 — 3500K
- 40 — 4000K
- 50 — 5000K

four — CRI
- 80 — 80 CRI
- 90 — 90 CRI

five — Material Gauge
- N — 18 gauge, minimum security
- D — 16 gauge, medium security
- X — 14 gauge, maximum security
- U — 12 gauge, ultra maximum security

six — Material
- C — Cold rolled steel
- S — Stainless steel

seven — Finish
- R — 304 Brushed stainless steel
- W — White

eight — Voltage
- VAR — Variable, 120-277 V, 50/60Hz
- 347 — 347VAC, 60Hz

nine — Driver
- DM — 0-10Vdc Dimming, standard

ten — Internal Lens
- 122 — Optic Plus LED diffusing acrylic, standard
- 130 — .125 in. LED diffusing Lexan
- 53 — .125 in. K12 prismatic acrylic
- 12 — .125 in. K12 prismatic polycarbonate
- 15 — .156 in. K12 prismatic polycarbonate
- 16 — .187 in. K12 prismatic polycarbonate
- 75 — .156 in. C73 prismatic tempered glass

eleven — External Lens
- 30 — .187 in. clear polycarbonate
- 32 — .250 in. clear polycarbonate
- 36 — .375 in. clear polycarbonate
- 38 — .500 in. clear polycarbonate
- 90 — .187 in. clear tempered glass
- 92 — .250 in. clear tempered glass
- 96 — .375 in. clear tempered glass

twelve — Door Fasteners
- AP — Stainless steel allen head with pin
- TP — Stainless steel torx head with pin
- PH — Phillips head, non-security

thirteen — Electrical Access
- A — 2.250 in. diameter access hole
- K — 0.875 in. diameter knockout(s), standard

fourteen — UL Listing
- D — Damp Location
- W — Wet Location

fifteen — Options
- 2C — Two-circuit wired
- CU — Canadian UL Listing
- EM — Emergency battery backup
- FH — Fuse and holder
- NL-LED — Night light, LED* (Amber available) *5-100% Adjustability*
- IMS — Integral Occ Sensor

* Field adjustable LED Night Night from approximately 250 - 500 Lumens.

Modifications are available to meet custom requirements.
Specifications and dimensions are subject to change without notice.

CRI	LED Life
>80	>100,000

LED Source (Box 2)	3000K		3500K		4000K		5000K		Input Watts
	Delivered Lumens	L/W	Delivered Lumens	L/W	Delivered Lumens	L/W	Delivered Lumens	L/W	
2' Fixture									
1W21	2048	89	2079	90	2140	93	2200	96	23.0
2W39	3766	95	3822	97	3935	99	4045	102	39.6
2W52	5041	92	5116	93	5267	96	5414	99	54.8
4' Fixture									
1W22	2129	95	2161	97	2225	100	2287	103	22.3
1W39	3766	95	3822	97	3935	99	4045	102	39.6
1W52	5041	92	5116	93	5267	96	5414	99	54.8
2W67	6488	96	6585	97	6779	100	6969	103	67.6
2W92	8838	94	8971	96	9235	99	9494	101	93.7
2W105	10081	92	10233	93	10534	96	10829	99	109.6

Delivered lumen output calculated using 122 inner lens and 32 (.250" Clear Polycarbonate) outer lens (Highlighted below).

Lens Multiplier - Use the multipliers below to adjust the delivered lumens

Internal Lens			External Lens		
53	.125 in. K12 prismatic acrylic	1.00	30	.187" Clear polycarbonate	1.02
12	.125 in K12 prismatic polycarbonate	.98	32	.250" Clear Polycarbonate	1.00
15	.156 in. K12 prismatic polycarbonate	.97	36	.375" Clear polycarbonate	.96
16	.187 in. K12 prismatic polycarbonate	.95	38	.500" Clear polycarbonate	.92
75	.156 in. C73 prismatic tempered glass	.97	90	.187" Clear tempered glass	1.04
122	Optic Plus diffusing acrylic	1.00	92	.250" Clear tempered glass	1.03
90 CRI Multiplier		**.86**	96	.375" Clear tempered glass	.99

Specified Output Option

L.C. Doane programmable drivers allows us to deliver a specific lumen output. If none of the options in the chart above fit your application, let us know the desired lumen output and we will do the rest. See the example how this will be specified.

Example Model:

ST-XX[1]SO-40/80-DCW-VARDM-122/32-TP-DAW-(XX[2]/LUMENS)

LUMENS = You provide the lumens.

XX[1] = We will determine the number of rows.

XX[2] = We will provide the wattage information.