Keria 3

TMSLIGHTING

ESTABLISHED 1923

Features

- Recessed source with multi-tiered diffusers provide excellent uniformity without any direct glare
- Downlight beam angle of 51° focuses on the work plane
- Suspended, architectural appearance with today's aesthetics
- Available with several configurations for application and design flexibility

Applications

The Keria family adds flair to your recessed lighting plan. Keria 3 flaunts the recessed style, in a tiered, suspended configuration. Using a pair of lightweight, green-edged acrylic diffusers, wide coverage is achieved along with modern aesthetics.

Construction

Recessed, steel enclosure, with a high-grade, anodized, aluminum reflector. 3/8" thick, green-edged acrylic diffusers are suspended by 3 aircraft cables.

Lamp

Operates with compact fluorescent (2x 42W max.), and integrated Cree™ LED (38W max.) light sources.

Note: LED systems are available only with 120-277V supply voltage. Only CF systems are available with a 347V supply.

LED modules are wired directly to the integral driver, not requiring a socket.

Only integrated LED sources are supplied, not CF lamps.

Diffusers

The tiered diffusers (2) are made of green-edged acrylic. They are secured to each other by a set of steel stand-offs, and supported by aircraft cables.

Ballast

Ballasts are integral and electronic. They are efficient with a high power factor greater than 90% and quiet within an "A" sound rating.

LED Driver

The LED source is controlled by an advanced, integral, electronic driver that delivers consistent power.

Surge Suppressor

All 120V, 277V, and universal voltage LED luminaires are equipped with an integral, 6kV surge suppressor.

Dimming

CF dimming options include Mark 7 ® (0-10V), Mark 10 ® (line voltage), DALI (addressable), or Ecosystem ®.

The LED dimming option is the 0-10V type, with current-sinking control.

Note: Use a current-sinking dimming system (by others) for LED dimming.

The dimming option is available to systems with 120-277V supply voltage only.

The dimming option is not available to systems with 347V supply voltage, or for outdoor CF applications.

Compatibility of this product is not guaranteed with all control systems.

IP23

Keria 3

TMSLIGHTING
ESTABLISHED 1923

Features

- Recessed source with multi-tiered diffusers provide excellent uniformity without any direct glare
- Downlight beam angle of 51° focuses on the work plane
- Suspended, architectural appearance with today's aesthetics
- Available with several configurations for application and design flexibility

Emergency

For CF systems, integral back-ups are available.

For LED systems, integral and remote emergency back-ups are available.

Note: The emergency option is available with 120-277V systems only.

The test switch and indicator light would be remote.

EM Integral CF: (min. operating temp. +5C/+40F)

EM Integral LED: (min. operating temp. +5C/+40F)

EMR Remote LED: (20 ft. / 6.096 m max. distance from EM to LED; min. operating temp. +5C/+40F; dry location)

Mounting

Install the ceiling pan assembly into the t-bar ceiling using the brackets, or mount directly to a wooden joist. Align the reflector with the 10" diameter hole, and use the aircraft cables to suspend the diffusers.

Follow the installation instructions for more details, and adhere to your local electrical code.

Finish

Available in plated, and polyester powder-coated finishes; see page 3, and the "Finishes and Diffusers chart".

Custom RAL finishes are available by special order.

Note: The specified finish is applied to the ball finials. The reflector, bezel, and spacers are anodized with a specular coating.

Compliances

QPS-C/US, or UL-C/US certified to UL1598 standards. Rated IP23 for dry, indoor locations.

The Consultants Europe (CE) listing is available upon request.

IP23

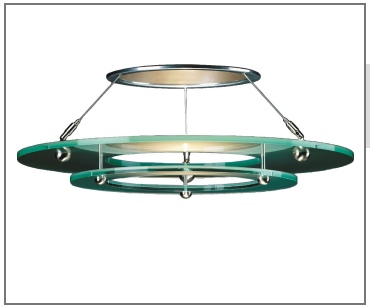

Keria 3

TMSLIGHTING
ESTABLISHED 1923

KR310 - ____ - ____ - ____ - ____ - ____ - ____
1 2 3 4 5 6

Project: _____
Type: _____
Quantity: _____

Notes:

Note: Some options may not be compatible with others. To ensure compatibility, please visit tmslighting.com, on the "configure" page of this luminaire, and use the configuration tool.

1 • Lamping

30LED: 30W LED (CRI 80)
38LED: 38W LED (CRI 80)
26CF2: 2x 26W CF (PL-T)
32CF2: 2x 32W CF (PL-T)
42CF2: 2x 42W CF (PL-T)

2 • LED CCT (color temp.)

—-: None
30K: 3000K
35K: 3500K
40K: 4000K

3 • Voltage

120: 120V
277: 277V
347: 347V (CF only)

4 • Finish

Plated
SN: Satin nickel
CH: Chrome
BC: Black chrome
AC: Antique copper
AB: Antique brass
SB: Satin brass
PB: Polished brass
Powder-coated
F05: White
F09: Pewter
F16: Gloss black
F19: Mirror silver
F24: Melted platinum (textured)
F25: Melted gold (textured)
F26: Melted copper (textured)
F31: Silver metallic
F32: Bronze metallic
F33: Pyrite bronze
RAL: RAL custom color (specify)

5 • Dimming

—-: None
DIM: CF dimming (Advance Mark 10 ®)
DIMV: CF dimming (Advance Mark 7 ®; 0-10V)
DIMD: CF dimming (Advance DALI)
DIME: CF dimming (Lutron Ecosystem ®)
DIML: LED dimming (0-10V; current-sinking)

6 • Emergency

—-: None
EM: Integral CF or LED
EMR: Remote LED

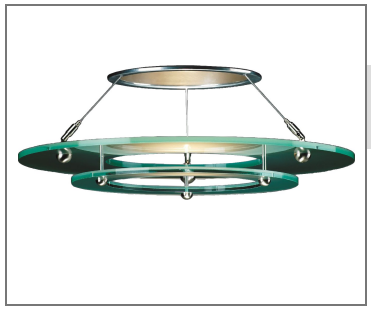

Keria 3

TMSLIGHTING
ESTABLISHED 1923

Dimensions

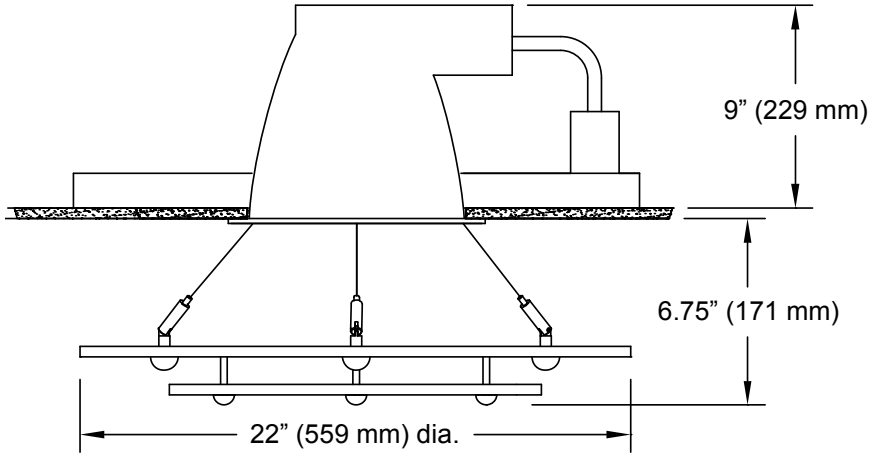

Custom
TMS Lighting can customize this and many of our standard fixtures. The dimensions, lamp types, enclosure and colors could be modified to suit your lighting and architectural requirements. Contact your local representative for more details: http://www.tmslighting.com/info/agents

Specifications are subject to change without notice.

TMS Lighting Inc.
247A Summerlea Road,
Brampton, Ontario,
Canada. L6T 4E1
Web Site: tmslighting.com

North America: (905) 793-1174
Toll-free: (866) 793-1174
Fax: (905) 793-1175

UK & Europe: 44-1474-250-654