CONTECH LIGHTING | a LEVITON company

Catalog No. _____

Type _____

Project _____

CTL2830

PAR30 Front Relamping Gimbal Line Voltage Track Fixture

Specifications/Features

Fixture

2-plane gimbal design permits 360° horizontal swivel and 150° adjustability in the vertical plane for excellent aiming.
"Sure-Set" yoke holds the fixture firmly in place.
Integral ON/OFF switch and track polarity indicator are standard.
Fixture will accept (1) LF30 lens by using FA-28 black accessory mounting clips.

Lamp

(1) 75W PAR30 Lamp (max.) 120V, E26 medium base.

Warranty

This fixture is covered by ConTech's full one (1) year replacement guarantee after date of purchase.

Listing

cCSAus Certified. Suitable for dry locations.

Fixture Compatibility

Standard ConTech track fixtures are cCSAus Certified as-is for use with ConTech's many track systems, as well as with Juno®[1] Lighting track. By changing the prefix in the part number, ConTech can install inserts which make our fixtures compatible with other manufacturers. Replace "CTL" with "HTL" for Halo®[2] track, "LTL" for Lightolier®[3] track, and "PTL" for Capri®[4] track. For more information, please consult our factory.

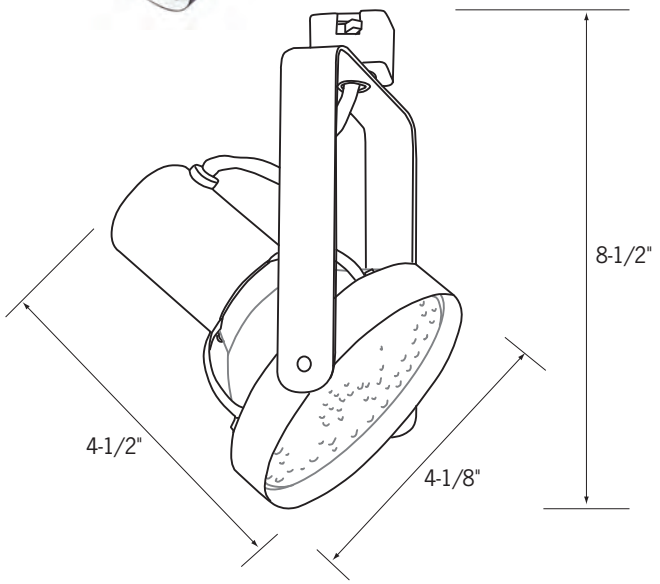

Ordering Information

Example Order: CTL2830 – P FA-28-P LF30-73

Track System	Fixture		Finish	Accessory Holder	Accessories
	2830	-			

CTL - ConTech
HTL - Halo
LTL - Lightolier
PTL - Capri

2830

B - Black
P - White
S - Silver

FA-28

LF30 - A, B, CL, G, LB, R, RO, Y, 73, LS, SL, UV
4-3/4" Dia. tempered glass lenses
LA-38-(B,P,S) - Egg-Crate Louver

Color/Pattern Legend
-A (Amber), **-B** (Blue), **-CL** (Clear), **-G** (Green), **-LB** (Light Blue), **-R** (Red), **-RO** (Rose), **-Y** (Yellow), **-73** (Spread Lens), **-LS** (Linear Spread Lens), **-SL** (Soft Light), **-UV** (Optivex UV Filter)

1. Juno is a registered trademark of Juno Lighting
2. Halo is a registered trademark of Cooper Lighting
3. Lightolier is a registered trademark of Philips Lighting
4. Capri is a registered trademark of Philips Lighting