Loro_Q

Project: _____

Type:

Downlights | arrayLED 13 W | CRI 80 | 4000K | Spot | Embossed white RAL 9003 | Damp location | 350mA

LL-E91208-N-15

IP44

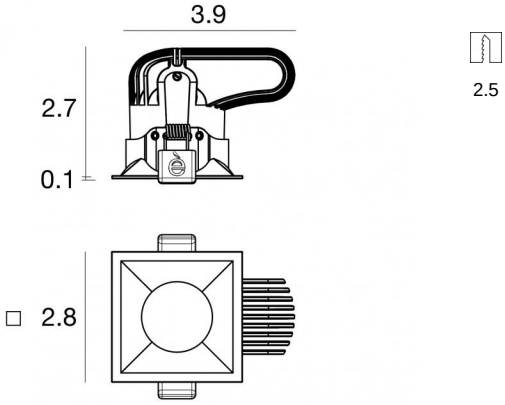

Technical data	
Type	Encasement with flange
Installation position	Ceiling
Installation environment	Indoor
Light Source	LED
Optics	Spot
Light emission direction	downward
Power	13 W
Operation	350mA
Source lumens	1854 lm
CCT	4000 K
Color rendering index	80 Ra
Safety class	Class 2
IP	IP44
Optical compartment IP	IP65
IK	IK08
Glow wire test	850°
Direct mounting on normally flammable surfaces	Yes
CE	Yes
ETL	Yes
Dimmable article	Yes
Directional	No
Tilting	No
Walk-over	No
Drive-over	No
Cable included	Yes
Cable length	0.98 ft
Resin potting	No
Type of light emission	Single emission
Net weight	0.57 lbs
Electrostatic discharge protection	No
Surge protection	No
Ordinary temperature on the glass	104 °F

Finishing casing	
Material	Die-cast Aluminum EN AB - 46100
Color	Embossed white RAL 9003
Process	Powder coating

Finishing diffuser	
Material	UV Resistant Polycarbonate
Color	transparent

Finishing radiator	
Material	Die-cast Aluminum EN AB - 46100
Color	Aluminum
Process	Polishing

Cables Electrification	
Cable connector	MALE JST SMR-02V-B
Cable connector	FEMALE JST SMR-02V-BC

Notes:

_____

_____

_____

_____

_____

Loro_Q

Downlights | arrayLED 13 W | CRI 80 | 4000K | Spot | Embossed white RAL 9003 | Damp location | 350mA | Base
LL-E91208-N-15

Single emission downlights for indoor application. The natural white LED light source with a spot light distribution is composed of 1 arrayled LEDs with CCT of 4000 K and a CRI 80; the source luminous flux is 1854 lm, with a 142.6 lm/W nominal luminous efficacy.

The device body is made of die-cast aluminium en ab - 46100 and features a embossed white ral 9003 finish, processed by means of powder coating; the diffuser is made of uv resistant polycarbonate. The ingress protection degree is IP44; the total weight is of 0.573 lbs.

The total absorbed power is 13 W. The power supply cable is included and features a 0.984 ft lenght.

and can be ceiling-mounted, with a 2.52 x 2.52 mm hole (in plasterboard).

Compliant with the EN 60598-1 standard and its specific provisions.

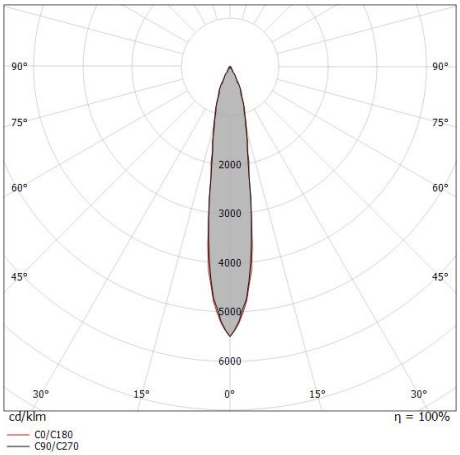

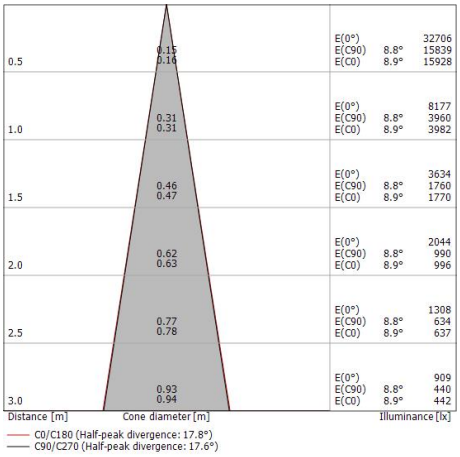

Energy efficiency class
This product contains a light source of energy efficiency class D.

Led features	
Light Output Ratio (LOR)	80 %
Source lumens	1854 lm
Delivered lumens	1486 lm
Power	13 W
Luminaire efficacy	114 lm/W
Color temperature	4000 K
Standard Deviation of Colour Matching	2 Step MacAdam
Color rendering index	80 Ra
Gamut Area Index	70 GAI
Color Rendering Index	14 R9
IES TM-30 Rf	82
IES TM-30 Rg	94
Black Body Locus	On
LED Life / Failure Ratio	
L70 B10 C0 296960h (at Tj 65 Ta 25)	

UGR	
UGR axial	16.6
UGR transversal	16.5
X=4H | Y=8H	S=0.25H
Reflection factor	70/50/20

OPTICAL	
Light distribution symmetry	Symmetrical
C0/C180 optics	18°
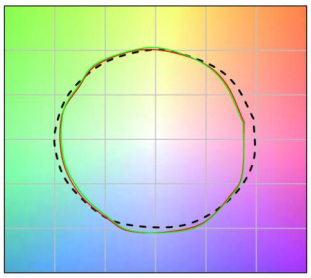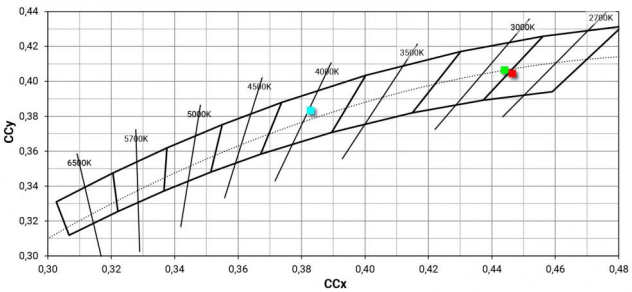
COLOR VECTOR GRAPHIC