Step Up Wallwash Specifications

Send inter•lux

Ordering Information[1]

F SW		H		WW	24		
Model	**Length**	**Power**	**Color**	**Optics**	**Voltage**	**Options**	**Housing**
F SW	12 24 48 RXX[3]	H	30 35 40	WW	24	C1 C2 C3	SU12 SU24 SU48

[1]Specify remote power supply separately below. [3]See page 2 for details.

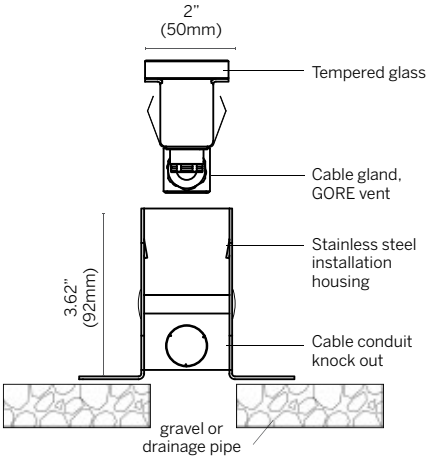

Luminaire
- Trimless for seamless integration into grade
- Single luminaire or continuous run of standard lengths
- IP67, UL STD 1598, wet location, Pedestrian driveover rated 3000 lb
- Stainless steel construction 304 with clear tempered glass 3/8" thick, with asymmetric optics
- Installation housing, stainless steel 304 construction, direct concrete pour
- 3.3' (1m) feed cable standard

Length
- 12 = 12.8" (324mm) OAL
- 24 = 24.6" (624mm) OAL
- 48 = 48.2" (1224mm) OAL
- RXX = R(dimension) continuous run of standard lengths

Power
- H = 7W/ft, 3000K, 475 lm/ft

Color Temperature
- 30 = 3000K
- 35 = 3500K
- 40 = 4000K
- 2 Step MacAdam
- CRI: > 85

Optics
- WW = wallwash

Voltage
- 24 = 24VDC fixture voltage

Options
- C1 = 10' (3m) feed cable
- C2 = 20' (6m) feed cable
- C3 = 30' (9m) feed cable

Housing
- SU12 = 12" housing
- SU24 = 24" housing
- SU48 = 48" housing

Power Supply[2] (Remote)

Non-Dim
- ☐ D-520-24007: Osram 96W, 24VDC, 120-277VAC

Dim
- ☐ D-520-24006: Osram 10% 0-10V dimming, 96W, 24VDC, 120-277VAC
- ☐ IL-JB-LED-24003-120V-DFPN: Lutron LTE 1% Forward Phase (with neutral) dimming, 5-40W, 24VDC, 120VAC, Case K, dry location enclosure
- ☐ IL-JB-LED-24010-UNV-D3W: Lutron L3D 1% 3-wire dimming, 5-40W, 24VDC, 120-277VAC, Case K, dry location enclosure
- ☐ IL-JB-LED-24010-UNV-DES: Lutron L3D 1% EcoSystem dimming, 5-40W, 24VDC, 120-277VAC, Case K, supplied in a dry location enclosure

[2]See power supply pages for details. No enclosure, unless stated. lm80 values shown.

IP67

Step Up Wallwash Dimensions

inter•lux

Fixture

Housing

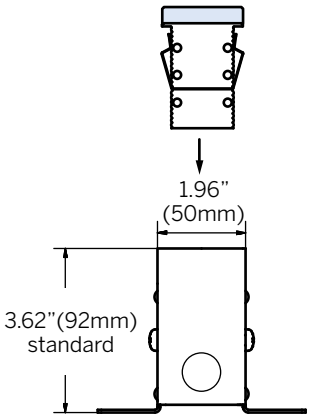

End view

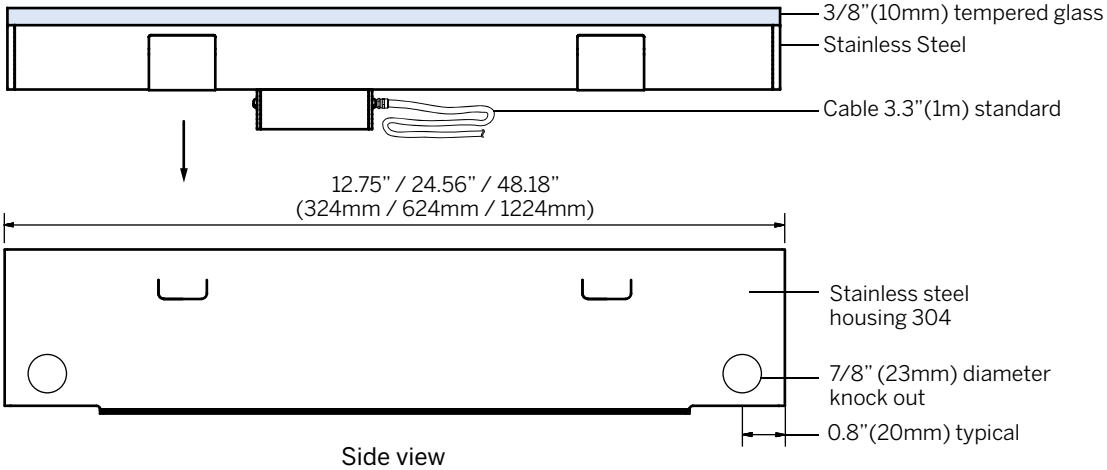

Side view

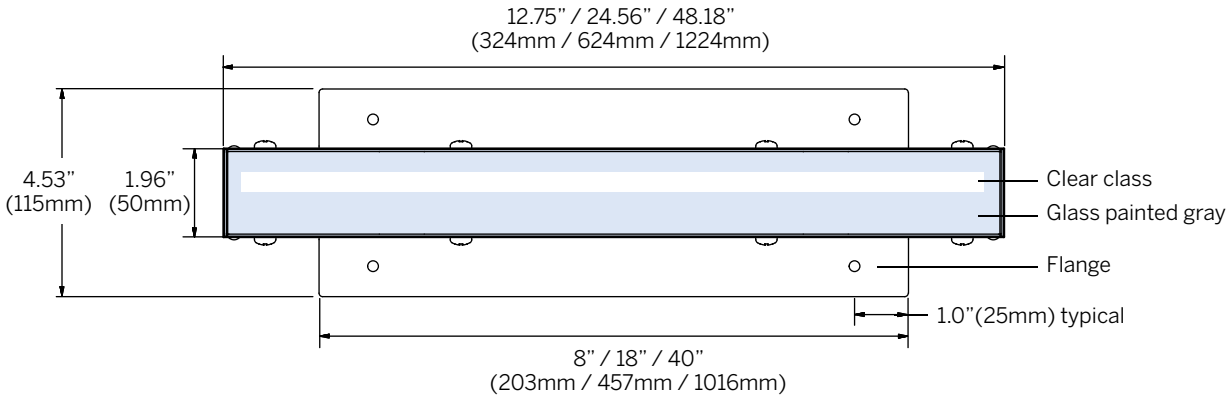

Top view

Continuous run

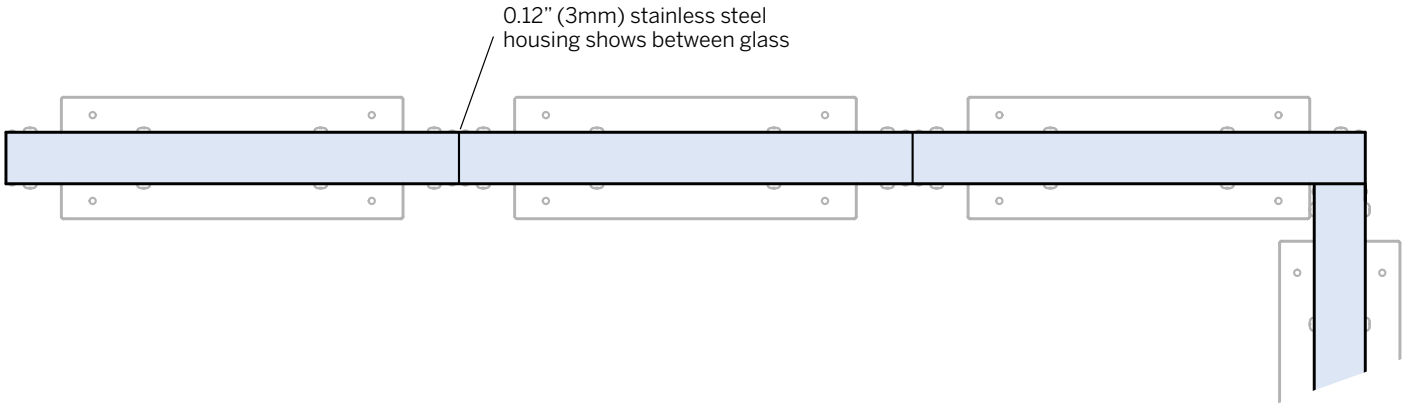

Step Up Wallwash Power Supplies

inter•lux

Single Color Drivers

Qty.	Part Number	Description	Case	Nominal Input Voltage (V)	Nominal Input Current (A)	Power Factor	Output Power Range (W)	Dimming Mode	Dimming Control	Dimming Range	Location Rating
	D-520-24007	Osram non-dim	1	120 277	0.97 0.39	0.9	1-96	N/A	N/A	N/A	Damp
	D-520-24006	Osram 0-10V dim	1	120 277	0.97 0.39	0.9	1-96	PWM	0-10V	10 –100%	Damp
	IL-JB-LED-24003-120V-DFPN	Hi-Lume A Series LED LTE	2	120	0.38	0.99	5-40	PWM	Forward phase with neutral	1 –100%	Dry
	IL-JB-LED-24010-UNV-D3W	Hi-Lume A Series LED L3D, 3-wire	2	120 277	0.38 0.17	0.99 0.96	5-40	PWM	3-Wire	1 –100%	Dry
	IL-JB-LED-24010-UNV-DES	Hi-Lume A Series LED L3D, EcoSystem	2	120 277	0.37 0.17	0.99 0.96	5-40	PWM	Ecosystem®	1 –100%	Dry

Although it is possible to exceed the remote mounting distance, the installer and/or end user must take precautions to prevent and/or test the effects of EMI (electromagnetic interference).

Case dimensions

Case 1 (no enclosure)

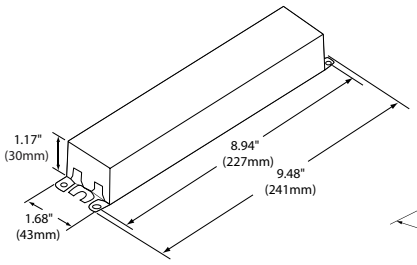

Case 2 Hi-Lume, case K (enclosure supplied)

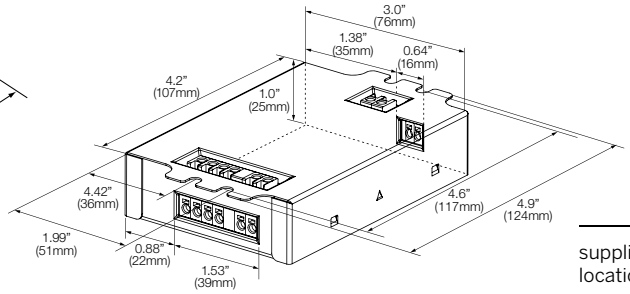

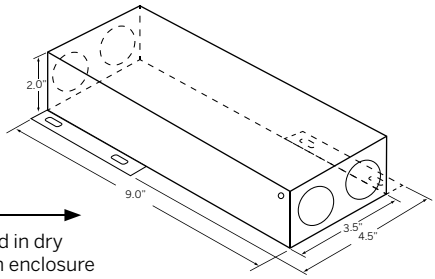

supplied in dry location enclosure

Wiring diagrams

96W Non-Dim

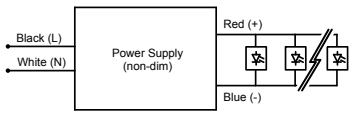

96W Dim

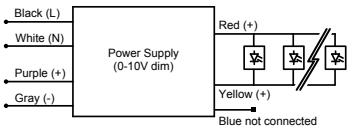

LTE (forward phase with neutral)

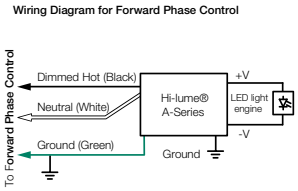

Note: Colors shown correspond to terminal blocks on driver.

L3D (3-wire)

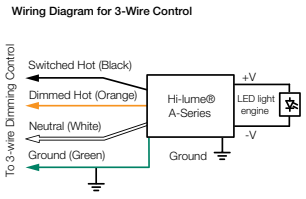

Note: Colors shown correspond to terminal blocks on driver.

L3D (Ecosystem®)

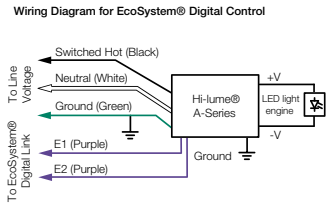

Note: Colors shown correspond to terminal blocks on driver.

Maximum wiring distance*

	Load per driver			
	Osram			Lutron
Wire gauge	≤48W	≤72W	≤96W	≤40W
#18AWG	37'	25'	18'	15'
#16AWG	59'	39'	29'	25'
#14AWG	95'	63'	47'	40'
#12AWG	151'	101'	75'	60'
#10AWG	241'	160'	120'	–

*Voltage drop guide for 24VDC. Actual Voltage drop to be calculated by installer

Step Up Wallwash RGB Interface

inter•lux

RGB Control Interface Details

Qty.	Part Number	Description	Nominal Input Voltage (V)	Maximum Output per channel (W)	Output Power Range (W)
	D-550-20003	DMX/Sequencer Interface	24	32	96

RGB Control case dimensions (DMX/Sequencer Interface)

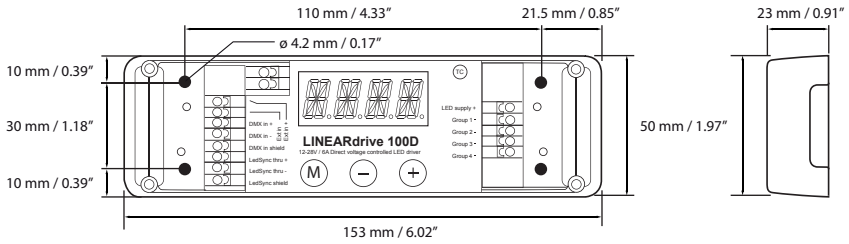

Wiring Diagram

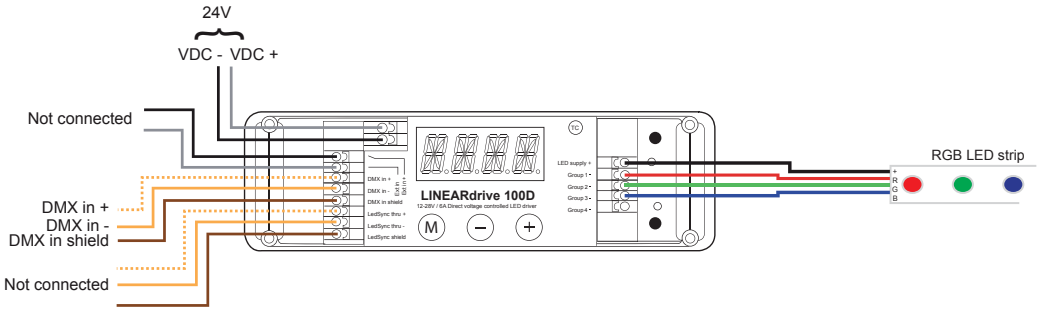

See installation / driver instructions for details.
Must order power supply separately