COLORKINETICS

Flex

Cover it all with points of light

Product Guide

Flex

Cover almost any structure with flexible strands of bright LED nodes.

In this guide:

Flex means flexibility

Bringing light, color, and motion to a structure helps add beauty, get attention, and make an impact. But today's more adventuresome architecture can be a challenge for lighting designers who want to add direct-view lighting to a curved wall, domed ceiling, or other unusual surfaces.

Our innovative, proven Flex family of direct-view LED luminaires meets these challenges—from displaying messages on curved building façades to bringing stunning LED light shows to stadium roofs. All Flex luminaires consist of flexible strands of efficient, addressable LED nodes that can be arranged along a nearly limitless array of surfaces and structures. The flexibility continues with a wide range of choices—color or white light, varying brightness, node spacings, strand length, lens options, beam angles, and more.

No matter what Flex luminaire you choose, you can be confident that it will deliver high-quality LED light, ease of commissioning and installation, and proven reliability. That's why so many lighting designers choose Flex for their more ambitious, artistic installations.

At Color Kinetics, we've been delivering advanced direct-view lighting solutions for more than a decade, bringing new excitement, attention, and beauty to landmark buildings, bridges, stadiums, and other high-profile structures around the world. Our full family of direct-view LED luminaires creates bright, addressable points of light (the Flex family and ArchiPoint) and lines of light (the Accent family and Vaya Tube family) that can be mounted on the exterior of a structure, adding visual interest and transforming buildings into eye-catching icons. Our direct-view luminaires can also display video, exciting color graphical effects, and messages.

Photography: Pro-Cal Lighting

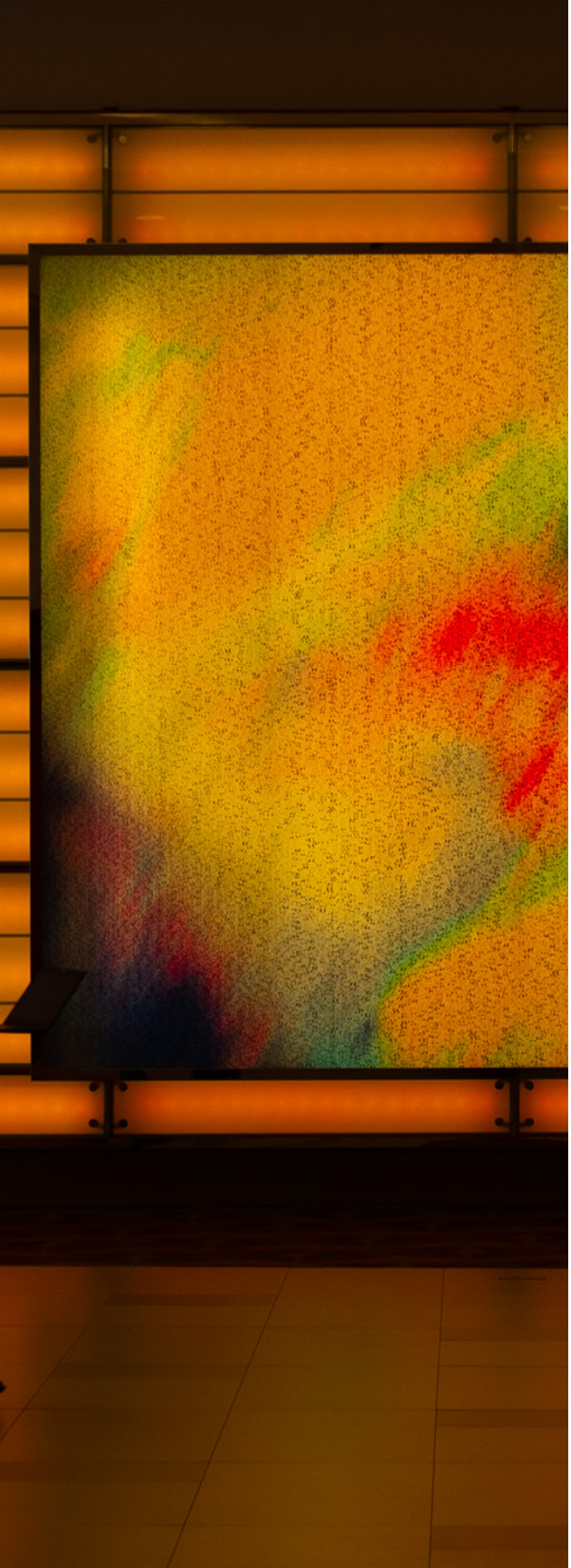

Created to meet the needs of the marketplace

The Flex family grew to meet the ever-changing needs of our customers—lighting designers, building owners, and other lighting professionals. We increased brightness, added new technical innovations, created new node designs and spacing, and created new options for strand length, lenses, power/data supplies, and other innovations. This commitment to innovation continues as the Flex family grows and evolves.

Ideal for a wide range of challenges

Every Flex direct-view installation is different. Some are informative, requiring bright white light to display important messages or upcoming events over a building entrance. Others seek to captivate an audience with stunning, full-color light shows on a large-scale surface—such as a stadium roof or curved façade.

And still others bring new light (and life) to iconic structures, such as monuments and bridges—even to landscape elements. To meet the varying needs of these exterior applications, Flex is durable and weather resistant. Its ability to bend and conform to almost any shape and dimension is a big advantage in interior and exterior applications.

From white to color, bright to brighter

Available in iColor, Intelligent White (iW), and Essential White (eW), Flex is right for a wide range of interior and exterior direct view implementations—including a large-scale low-resolution video on an exterior façade. You can choose the Flex solution that provides the right brightness, ensuring that your design makes an impact up close, and can be seen clearly from a distance.

Why do so many lighting designers choose Flex?

Flex is different from other luminaires—and, as many lighting designers tell us—more fun to work with.

Direct-view luminaires can do more than just illuminate a structure. They can add real excitement and engagement with attention-getting motion, animation, and even low-resolution video. Flex frees designers from the inherent limitations of rigid luminaires. Instead, Flex delivers the freedom to think beyond straight lines—and yes, more fun.

Each member of our extensive family of Flex luminaires provides these core advantages.

Flexibility
It's right there in the name. Flex means flexibility. Unlike linear luminaires, Flex gives you bendable, adjustable strands of LED nodes that you can configure and arrange as you see fit—from a consistent grid to complex geometries. Choose the brightness you need, the strand length that matches your structure, and the node spacing that delivers the right look and resolution.

Full Family of Solutions
With the Flex family, there are lots of choices—iColor Flex LMX gen2 and Flex Micro gen3, RGB for dynamic color changing light, iW Flex Compact for tunable white light, and eW Flex Compact and Flex Micro, eW for solid white light. Plus myriad options and choices. So you have the freedom to choose the exact direct-view luminaire that meets your needs.

Bright Output
We optimize our LED selection (see page 11) for maximum output and consistency, ensuring performance that goes well beyond comparable luminaires. Brighter output lets you take on larger structures and create ambitious designs that get noticed. And our lumen measurement complies with IES LM-79-08 testing procedures for consistency.

Easy Installation
Flex luminaires are exceptionally easy to get up and running, thanks to simple mounting and auto addressing for every node. So projects proceed smoothly—achieving impressive results in less time, with less complexity.

Proven Reliability
All Flex luminaires are designed to be extremely reliable, year after year—thanks to smart design, extensive testing, and years of experience. Flex luminaires can handle a wide range of extreme conditions, humidity, and temperature shifts—delivering dependable performance.

Complete Solution
Advanced, reliable Flex luminaires are a critical part of your direct-view lighting solution, but it's not the only element that matters. That's why Color Kinetics offers a full range of complementary solutions—including power/data supplies, controllers, and much more. All designed and optimized to ensure seamless integration and years of trouble-free operation.

Photography: Mark Steele

Find the Flex luminaire that meets your needs

All Flex solutions are flexible strands of addressable LED nodes that feature dynamic integration of power and control. From there, Flex branches out into a range of solutions with specific capabilities designed to meet your needs.*

*** Go to www.colorkinetics.com/Products/Application/Direct-View/ for more information about the Flex Family—including high-performance four-channel FlexElite luminaires, which feature a larger, brighter node.**

iColor Flex LMX gen2

Brightest color output for larger installations

iColor Flex LMX gen2 brings you large, high-intensity, full-color LED nodes designed for extraordinary effects and extensive installations. It's the right choice for large-scale signage, building-covering video displays, and other ambitious direct view projects. With bright full-color light output of up to 28.7 candela, your installation will be viewable from long distances—as well as daylight-visible for even more impact.

Standard lens options include clear flat, translucent dome, and narrow beam lenses. Optional marquee lenses, available in clear, semi-frosted, and translucent, snap on flat-lens nodes to make them look more like bulbs of a traditional theater marquee. For even more customization, Flex LMX gen2 offers standard and custom strand lengths, node spacings, and leader cable lengths.

iW Flex Compact

High-intensity tunable white LED nodes

iW Flex Compact strands are designed for high-impact effects and large-scale direct-view exterior installations. Each compact node produces tunable white light output of up to 91.6 candela, making iW Flex Compact exceptionally bright, daylight-visible—and suitable for viewing from a distance. And iW Flex Compact nodes contain warm and cool white LEDs, so you can choose the right color temperature—from 2700 K to 6500 K. Since each Flex node is individually controllable, you can control and vary the tone and brightness of iW Flex nodes, creating a wide range of fascinating visual effects. When your application calls for bright, tunable white light, iW Flex Compact is the right choice.

Standard lens options include clear flat, translucent dome, and narrow beam lenses. Optional marquee lenses, available in clear, semi-frosted, and translucent, snap on flat-lens nodes to make them look more like bulbs of a traditional theater marquee. These marquee lenses can be mounted in front of a substrate or directly to mounted strands.

eW Flex Compact

Solid white light for all applications

eW Flex Compact brings you strands of solid white LED nodes that can be installed across any interior or exterior surface, including walls, ceilings, floors, three-dimensional sculptures, set pieces, and more. eW Flex Compact is also a great solution for low-resolution video.

With compact nodes that output light up to 89.6 candela (129,758 nits), eW Flex Compact produces bright, daylight-visible light. When your application calls for solid white light, eW Flex Compact is the right choice. Standard lens options include clear flat, translucent dome, and narrow beam lenses. Optional translucent flat, clear dome, narrow beam, semi-frosted flat, and semi-frosted dome lenses are available.

Flex Micro gen3, RGB

Bright color output in a flexible form factor

Flex Micro gen3, RGB features smaller, high-intensity full-color LED nodes that deliver daylight-visible light output of up to 3 candela. This output makes it appropriate for video displays and large-scale signage. Daylight visibility means that your design will be visible day and night, an important consideration for video, messaging, and other graphical installations.

Standard lens options include clear and translucent dome lenses and clear flat lens. Standard 50-node strands can be field-shortened, and custom lengths of 1 to 60 nodes are also available.

Flex Micro, eW

Small but powerful white light nodes

Flex Micro, eW is a versatile strand of 50 small, individually controllable LED nodes that deliver solid white light, outputting up to 10.5 candela and 7,529 nits per node. Flex Micro, eW can be installed across interior or exterior surfaces, including walls, ceilings, floors, three-dimensional sculptures, set pieces, and more. Flex Micro, eW's small size makes it appropriate for low-resolution video.

Daylight visibility means that your design will be visible day and night, an important consideration for video, messaging, and other graphical installations.

Flex Micro, eW strands are available with standard on-center node spacing of 102 mm (4 in) or 305 mm (12 in). Strands can be mounted directly to a surface. Detachable leader cables in multiple lengths allow you to install strings at the appropriate distance from power/data supplies.

	LMX gen2	iW Compact	eW Compact	Micro gen3, RGB	Micro, eW
Power consumption (per node)	1 W	1 W	1 W	0.43 W	0.5 W
Viewing angles	36°, 105°, 165°	36°, 105°, 165°	36°, 105°, 200°	105°, 165°	105°, 165°
Lumens per node	13 to 30	28 to 80	35 to 87	3.8 to 7.7	17.5 to 27.8

Our advanced technologies raise the bar

Color Kinetics is setting new standards for consistency and accuracy by developing advanced technologies that are integrated into our luminaires, including our Flex family. These technologies work together to deliver ever-escalating levels of quality, performance, and accuracy required for your most innovative and ambitious projects.

Optibin
Our LED optimization technology begins the color consistency process by grouping (or binning) LEDs by flux as well as center wavelength. This proprietary binning optimization process uses an advanced bin selection formula that exceeds industry standards for chromaticity. The result? Higher uniformity and consistency of hue and color temperature for all our luminaires. Integrated into all Flex luminaires.

Chromasic
Our custom-designed and patented microchip is the fast-thinking brain at the core of our intelligent luminaires, integrating power, communications, and control. About the size of a pencil eraser, Chromasic enables precise, pixel-level control of even the most complex lighting project. Unequalled simplicity, billions of colors, proven reliability, new possibilities—Chromasic delivers it all and more in a single silicon chip. At the core of all Flex luminaires.

To find out how innovative technologies within our advanced luminaires can help you do more visit www.colorkinetics.com/Learn.

Color and White options

Flex luminaires create dots of intense, high-quality dynamic color, or white light, depending on your needs. iColor Flex LMX gen2 and Flex Micro gen3, RGB bring exceptional dynamic color light via iColor technology. Flex Compact is also available in tunable IntelliWhite (iW), and Flex Compact and Flex Micro, eW are available in Essential White models for exceptional white light.

Flex LMX/Compact

RGB
Standard option for intensely saturated color light.

iW (IntelliWhite)
Tunable white light in a range of color temperatures from 2700 K to 6500 K.

eW (Essential White)
White light in one of seven color temperatures—2700 K, 3000 K, 3500 K, 4000 K, 5000 K, 5700 K, or 6500 K.

Flex Micro

RGB
Standard option for intensely saturated color light.

eW (Essential White)
White light in one of seven color temperatures—2700 K, 3000 K, 3500 K, 4000 K, 5000 K, 5700 K, or 6500 K.

What makes Flex LMX & Flex Compact so flexible—and reliable

Durable and weather-resistant

All Flex nodes are sealed for maximum node life and water-resistance—IP66-rated for outdoor applications.

Optimized nodes

Choose the node that outputs the light (color, tunable white, or white) and brightness that match your specific needs.

iColor LMX gen2

Standard and optional lenses

Each Flex solution offers a range of standard lens options, as well as optional lenses—ensuring that your implementation looks fantastic, up close and from a distance.

Standard and custom spacing and lengths

Flex lets you choose the node spacing length that works best for your implementation.

Standard 50 nodes with 102 mm (4 in) or 305 mm (12 in) on-center node spacing.

Custom 1 to 60 nodes are available with 76 mm (3 in) to 610 mm (24 in) on-center node spacing.

Maximum flexibility

All Flex node strands can be field-shortened, to customize the string required for your installation.

Adaptable mounting

Flex nodes can be mounted directly on a surface or substrate, arranged as needed—in uneven node spacing and complex geometries, or optional mounting tracks to ensure straight linear runs.

Node/cable colors

Black, white or clear

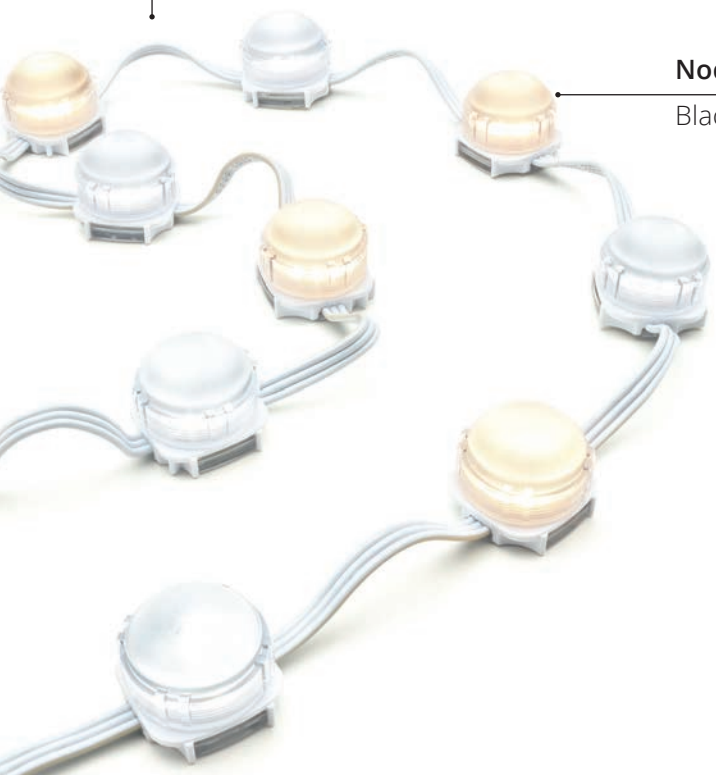

iW Flex Compact

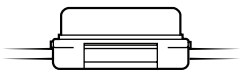

Flat Lens
Clear or semi-frosted
Viewing angle—105°

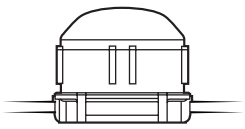

Narrow Lens
Viewing angle—36°

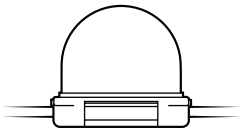

Dome Lens
Semi-frosted or translucent
Viewing angles
165° (iColor Flex LMX gen2, iW Flex Compact)
200° (eW Flex Compact)

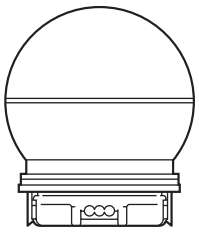

Optional Marque Lens
Clear semi-frosted, or translucent

What makes Flex Micro so flexible—and reliable

Durable and weather-resistant

All Flex nodes are sealed for maximum node life and water-resistance—IP66-rated for outdoor applications.

Flex Micro gen3, RGB

Standard and optional lenses

Flex Micro is available in clear and translucent dome lenses and clear flat lens.

Standard and custom spacing and lengths

Standard 50 nodes with 102 mm (4 in) or 305 mm (12 in) on-center node spacing.

Custom 5 to 72 nodes are available with 51 mm (2 in) to 610 mm (24 in) on-center node spacing.

Maximum flexibility

All Flex node strands can be field-shortened, to customize the string required for your installation.

Adaptable mounting

Flex nodes can be mounted directly on a surface or substrate, arranged as needed—in uneven node spacing and complex geometries, or optional mounting tracks to ensure straight linear runs.

Node/cable colors

Black, white or clear

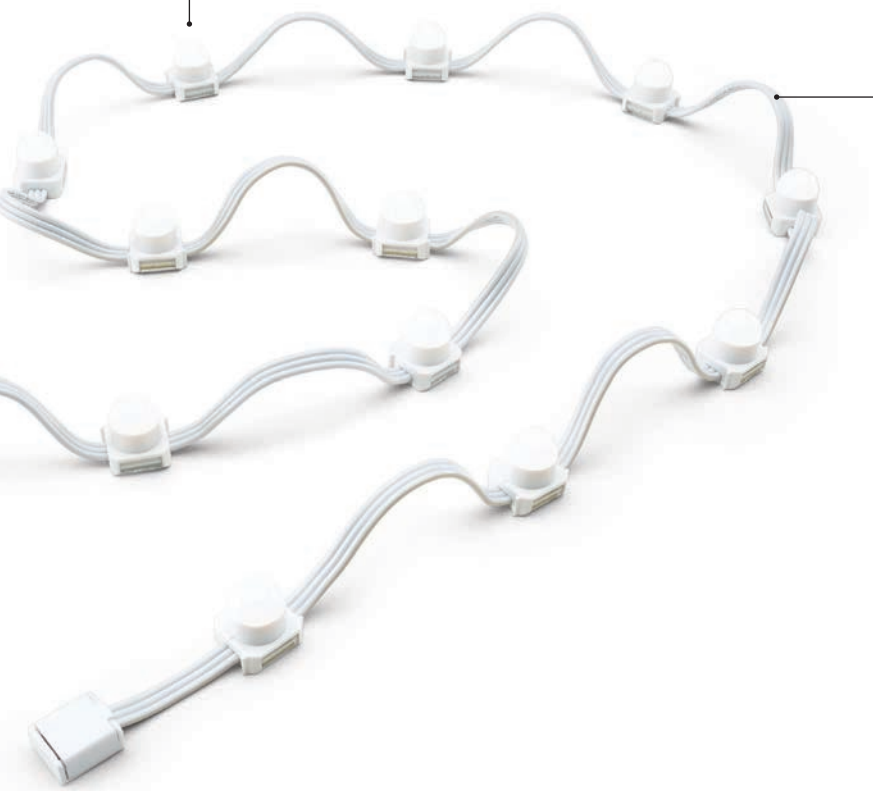

Flex Micro, eW

Flat Lens
Clear or translucent
Viewing angle—105°

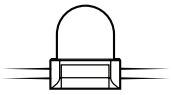

Dome Lens
Clear or translucent
Viewing angle—165°

Exceptional lighting takes more than a luminaire

To unlock the full potential of your Flex luminaires, you need the right components to power and control them. Color Kinetics completes your solution with:

Controllers

Our broad line of controllers brings you differing capabilities that match your specific needs, the complexity of your project, and your budget. Our controllers offer the industry-standard DMX protocol, or our proprietary, scalable KiNET protocol for Ethernet networks. Because of addressing limitations, DMX is appropriate for relatively simple installations, or for light shows in which multiple Flex luminaires operate in unison.

Because it is not subject to DMX addressing limitations, Ethernet is the preferred environment for intricate color-changing light shows using iColor Flex LMX gen2 or Flex Micro gen3, RGB. All Flex solutions work seamlessly with our full range of controllers, including Light System Manager, Video System Manager Pro, iPlayer 3, Antumbra iColor Keypad, and ColorDial Pro, as well as third-party DMX controllers.

Power/Data Supplies

We pair each Flex luminaire with the right power/data supply, delivering the power and data needed for your project, ensuring exceptional operation, and maximizing run lengths.

Monitoring and Management

Interact Landmark (formerly Philips ActiveSite) is the first-ever cloud-hosted connected lighting system for architectural LED lighting installations. Interact Landmark allows you to remotely monitor, manage, and maintain an installation site from anywhere in the world, using a secure web connection.

Immerse yourself in digital art at the city by the bay

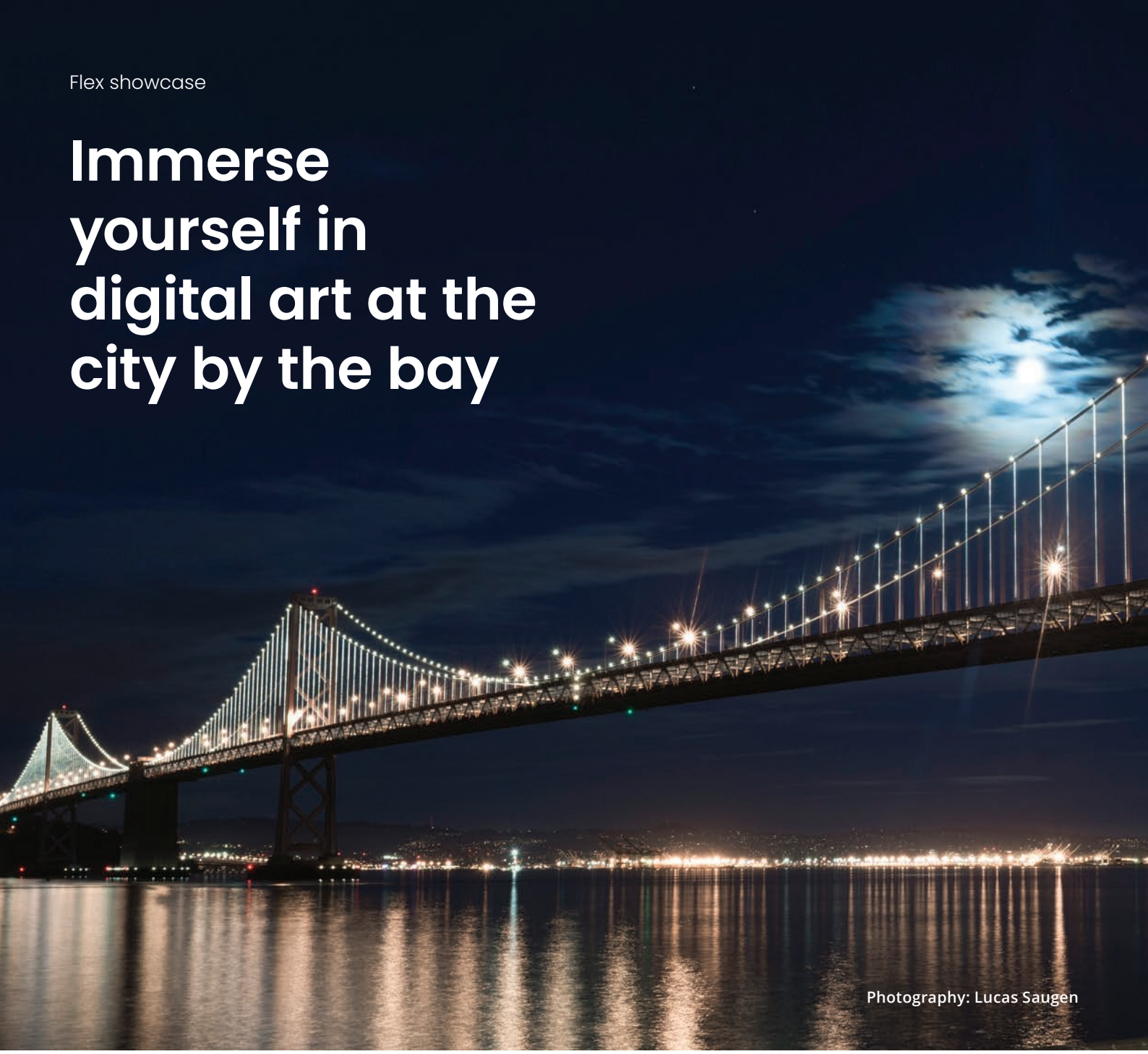

Photography: Lucas Saugen

Considered the largest LED lighting sculpture in the world, The Bay Lights is a popular and permanent part of the San Francisco Bay area.

This living sculpture uses 25,000 nodes of Color Kinetics eW Flex Compact, selected because of its ability to withstand harsh weather. The installation also incorporates ActiveSite, our cloud-based connected lighting platform, which enables more efficient management of the iconic landmark—including remote diagnostics, reporting, data analytics, and control.

Product	eW Flex Compact

Eye-popping light transforms a Warsaw landmark

Photography: Signify Poland

Color Kinetics illuminates the second tallest skyscraper in Poland with more than 80,000 individually controllable iColor Flex LMX gen2 light points.

This 220 m (722 ft) skyscraper, located in the heart of Warsaw's business district, is the largest installation of Color Kinetics technology in Central Eastern Europe. Dynamic content displayed on the Flex installations—including images and messages—is visible within a radius of several kilometers throughout Warsaw.

Product	iColor Flex LMX gen2
Details	80,000 nodes used to create two screens 71 m (233 ft) by 39 m (128 ft)

Lighting an undulating three-story lantern

Photography: © James Newton

Flex transforms the glazed lantern structure that spans the 5th to the 7th story of the building on the corner of Oxford and Soho Streets in London's prime shopping district.

Forty-five custom length strands ranging from 26 nodes to 71 nodes were installed inside the lantern and attached to a specially designed frame that follows the undulating glass. A controller manages a series of lighting scenes based on the seasons and nature that display automatically throughout the year and specific scenes that mark holidays and other special days.

Product	Flex Micro gen2, RGB
Details	Forty-five custom length strands ranging from 26 nodes to 71 nodes

Crystal glasses shine in hotel lobby

Photography: Hyersonic and Sosolimited

The lobby of Baccarat's opulent, 50-story flagship hotel features an innovative lighting installation.

It integrates 1,824 of Baccarat's famous Harcourt crystal glasses and 40 strands of iColor Flex LMX gen2 nodes. This wall shimmers with dynamic color and shifting background images that reflect the mood of the hotel and time of day—from geometric shapes to candlelight. It also displays periodic animations that surprise and delight hotel guests.

Product	iColor Flex LMX gen2
Details	1,824 Harcourt glasses are beautifully illuminated by 900 plus nodes of iColor Flex LMX gen2

Moscow mall mirrors Times Square billboards

Photography: Gleb Igrunov

This massive shopping mall and entertainment complex features an imaginative lighting project that is the first and largest of its kind in Russia.

iColor Flex LMX gen 2 nodes are mounted on VEGAS Crocus City's ventilated façade—transforming its media façade into a vibrant, full-colored spectacle. Managed from a single location, the façade can be programmed with text, images, and color effects for decorative, entertainment, or commercial purposes.

Product	iColor Flex LMX gen2

College faces become large-scale art

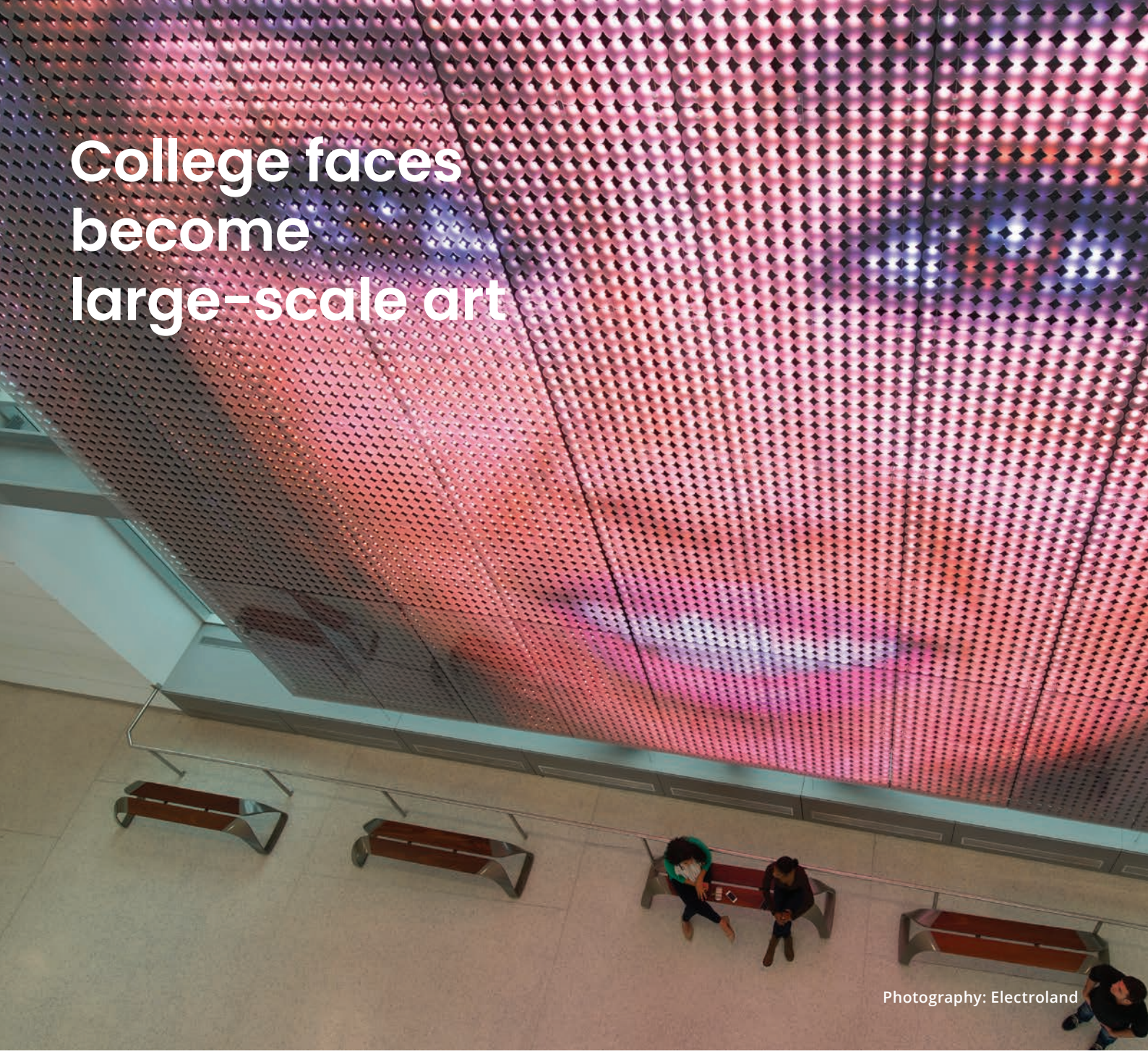

Photography: Electroland

When students pass through a central atrium at Gateway Community College, they see slowly shifting photos of their classmates, professors, and administrators on a 9 x 9 m (30 x 30 ft) LED wall.

Strands of iColor Flex LMX full-color LED nodes enable this innovative, eye-catching wall to display College Faces, a slow-motion collection of photos (including some from smartphones) that changes every thirty seconds.

Product	iColor Flex LMX
Details	9 m (30 ft) by 9 m (30 ft) screen with iColor Flex LMX spaced 4 inches on center

Specifications and information

Products	Lens options	Node spacing	Power consumption	Lumens per node	Efficacy lm/W	Nits per node	CRI
iColor Flex LMX gen2	Clear Flat Lens, Semi-Frosted Flat Lens, Narrow Lens, Semi-Frosted Dome Lens, Translucent Dome Lens	102 mm (4 in) 305 mm (12 in)	1 W	13 to 30	13 to 30	17,004 cd/m² 41,949 cd/m² 3,450 cd/m²	–
iW Flex Compact			1 W	28 to 80	29.2 to 79.4	–	–
eW Flex Compact			1 W	35 to 87	35 to 86.9	Clear Flat Lens 2700 K -45,127 cd/m² 4000 K -47,679 cd/m² Narrow Beam Lens 2700 K -122,240 cd/m² 4000 K -129,758 cd/m² Translucent Dome Lens 2700 K -10,660 cd/m² 4000 K -12,106 cd/m²	82 to 86

General information

Viewing Angles	36°, 105°, 165° (iColor Flex LMX gen2 & iW Flex Compact) 36°, 105°, 200° (eW Flex Compact)		
LED Channels	RGB—Red/Green/Blue (iColor Flex LMX gen2) iW—2700 K to 6500 K (iW Flex Compact) eW—2700 K, 3000 K, 3500 K, 4000 K, 5000 K, 5700 K, or 6500 K (eW Flex Compact)		
Input Voltage	**24 VDC via** sPDS-60ca 24V sPDS-480ca 24V PDS-60ca 24V CM-150 CA 24V		
Housing Material	Polycarbonate		
Lens	UV-protected polycarbonate		
Approbations	UL/cUL, FCC Class A, CE		
Environment	Dry/Damp/Wet Location, IP66		
Weight	**4 inch spacing**	**12 inch spacing**	
	1.5 kg (3.3 lb)	1.74 kg (3.8 lb)	
Dimensions	**Flat Lens**	**Narrow Lens**	**Dome Lens**
	31 x 32 x 17 mm (1.2 x 1.3 x 0.7 in)	31 x 32 x 27 mm (1.2 x 1.3 x 1.06 in)	31 x 32 x 28 mm (1.2 x 1.3 x 1.11 in)

For further information

Complete details of every family, including part numbers, installation instructions, specification sheets, .ies files, and product drawings, can be found on the respective product pages.

iColor Flex LMX gen2

iW Flex Compact

eW Flex Compact

Accessories

Accessory options let you customize Flex LMX and Flex Compact. Specification Sheets and product drawings can be found on the respective product pages.

Dimensions

Flat Lens

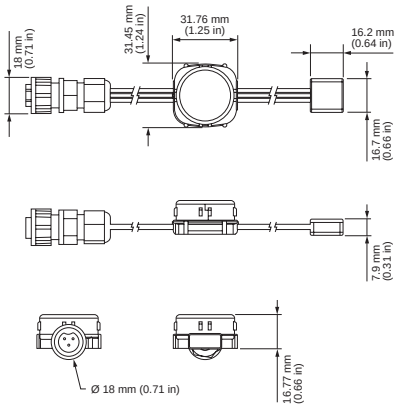

Narrow Lens

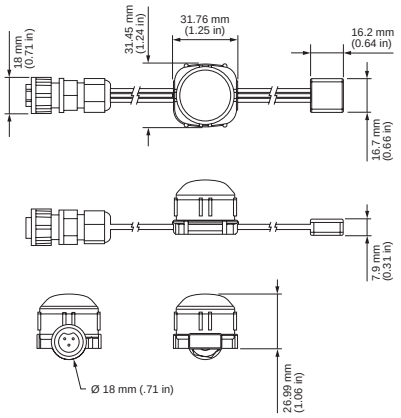

Dome Lens

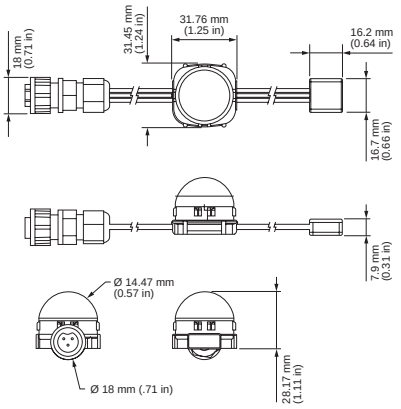

Glare Shield

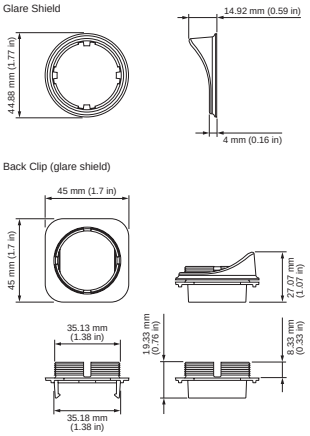

Mounting Accessories

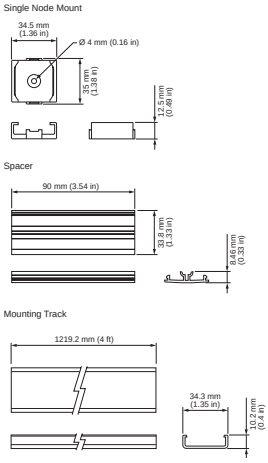

Marquee (used with flat lens only)

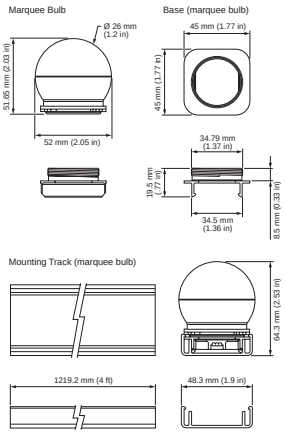

Configuration and planning

Regardless of the size and complexity of your installation, the planning time you spend up front can help streamline the installation and configuration of your luminaires. Keep these points in mind as you plan your installation:

Which Power/Data Supplies are right for your luminaires?
Download the **Color Kinetics Product Guide**.

Want to display video on your structure?
You may be a lighting designer who wants to tap the power of video, a municipality that wants to turn a landmark into an icon, or a building owner/manager who wants to draw attention to your office tower, stadium, casino, or other structure. Before you dive into video, there are some initial questions you need to ask yourself, key elements you'll need to create a complete solution, and some specific technical considerations that you need to address by reading **Color Kinetics Video Guidelines**.

Additional considerations
Determine whether to address luminaires and configure your lighting system offline or interactively. With offline configuration, you stage and configure your system off-site, prior to installation. Offline configuration can be convenient when luminaires are to be installed in multiple locations or locations with difficult access. Interactive configuration is typically performed by an experienced technician, after luminaires have been installed. The interactive method can save time, since you only connect and test your luminaires once.

Accessories

	Item Number	Item 12NC
Leader Cable for iColor Flex MX/LMX, 7.6 m (25 ft), Black	108-000045-00	910503700696
Leader Cable for iColor Flex MX/LMX, 15.2 m (50 ft), Black	108-000045-01	910503700697
Leader Cable for iColor Flex MX/LMX, 30.5 m (100 ft), Black	108-000045-02	910503700698
Leader Cable for use with CM-150 CA (Item # 109-000033-01), 4-Wire, 15.2 m (50 ft)	108-000080-01	912400135907
Leader Cable for use with CM-150 CA (Item # 109-000033-01), 4-Wire, 30.5 m (100 ft)	108-000080-02	912400135908
Leader Cable for use with CM-150 CA (Item # 109-000033-03), 3-Wire, 305 mm (1 ft)	108-000081-01	912400136051
Leader Cable for use with CM-150 CA (Item # 109-000033-03), 3-Wire, 7.6 m (25 ft)	108-000081-00	912400135909
Leader Cable for use with CM-150 CA (Item # 109-000034-01), 4-Wire, 15.2 m (50 ft), IP66	108-000082-01	912400135910
Leader Cable for use with CM-150 CA (Item # 109-000034-01), 4-Wire, 30.5 m (100 ft), IP66	108-000082-02	912400135911
Leader Cable for use with CM-150 CA (Item # 109-000034-03), 3-Wire, 7.6 m (25 ft), IP66	108-000083-00	912400135912
Flex Glare Shield Kits, Qty 50, Black	120-000179-00	912400130036
iColor Flex LMX gen2, iW/eW Flex Compact Marquee Lens Kits, Qty 50, Clear, Black	999-007997-01	910503702309
iColor Flex LMX gen2, iW/eW Flex Compact Marquee Lens Kits, Qty 50, Clear, White	999-007997-00	910503702308
iColor Flex LMX gen2, iW/eW Flex Compact Marquee Lens Kits, Qty 50, Semi-Frosted, Black	999-007997-05	910503702313
iColor Flex LMX gen2, iW/eW Flex Compact Marquee Lens Kits, Qty 50, Semi-Frosted, White	999-007997-04	910503702312
iColor Flex LMX gen2, iW/eW Flex Compact Marquee Lens Kits, Qty 50, Translucent, Black	999-007997-03	910503702311
iColor Flex LMX gen2, iW/eW Flex Compact Marquee Lens Kits, Qty 50, Translucent, White	999-007997-02	910503702310
Marquee/Accessory Mounting Track, for use with iColor Flex LMX gen2 and iW/eW Flex Compact, 1.2 m (4 ft), Black	101-000057-04	910503704267
Marquee/Accessory Mounting Track, for use with iColor Flex LMX gen2 and iW/eW Flex Compact, 1.2 m (4 ft), White	101-000057-03	910503704266
Marquee/Accessory Spacers, for use with iColor Flex LMX gen2 and iW/eW Flex Compact, Qty 50, 305 mm (12 in), Black	101-000075-03	910503704275
Marquee/Accessory Spacers, for use with iColor Flex LMX gen2 and iW/eW Flex Compact, Qty 50, 305 mm (12 in), White	101-000075-01	910503704273
Marquee/Accessory Spacers, for use with iColor Flex LMX gen2, Qty 50, 102 mm (4 in), Black	101-000075-02	910503704274
Marquee/Accessory Spacers, for use with iColor Flex LMX gen2, Qty 50, 102 mm (4 in), White	101-000075-00	910503704272
Flex Compact/iColor Flex LMX gen2 Single-Node Mounts, 50 mounts, Black	101-000058-01	910503700047
Flex Compact/iColor Flex LMX gen2 Single-Node Mounts, 50 mounts, White	101-000058-00	910503700046
iColor Flex LMX gen2, iW/eW Flex Compact Mounting Track, 1.2 m (4 ft), Black	101-000057-01	910503700045
iColor Flex LMX gen2, iW/eW Flex Compact Mounting Track, 1.2 m (4 ft), White	101-000057-00	910503700044
Flex Spacers, Qty 50, 102 mm (4 in), Black	101-000061-00	910503700052
Flex Spacers, Qty 50, 102 mm (4 in), White	101-000059-00	910503700048
Flex Spacers, Qty 50, 305 mm (12 in), Black	101-000061-01	910503700053
Flex Spacers, Qty 50, 305 mm (12 in), White	101-000059-01	910503700049
Power Supplies		
PDS-60ca 24 V, DMX/Ethernet	109-000016-04	912400133526
PDS-60ca 24 V, Pre-Programmed	109-000016-00	910503700095
sPDS-480ca 24V	109-000026-01	912400133528
sPDS-60ca 24 V, EU/UK power cord	109-000021-05	912400133636
sPDS-60ca 24 V, US power cord	109-000021-04	912400133527
Power Supply, 320W 24V, 100-277V, IP67, RCM	309-000014-07	912400133660
Vaya Power Supply, 150W 24V, 100-277V, IP67, CCC	309-000014-02	912400133655
Vaya Power Supply, 150W 24V, 100-277V, IP67, RCM	309-000014-06	912400133659
Vaya Power Supply, 150W 24V, 100-277V, IP67, UL, CE, PSE	309-000014-00	912400130538
CM-150 CA, DIN Rail Mount, Four-Wire Terminal, 24V, IP00	109-000033-00	912400135766
CM-150 CA, DIN Rail Mount, Three-Wire Terminal, 24V, IP00	109-000033-02	912400135768
CM-150 CA, Surface Mount, Four-Wire Terminal, 24V, IP66	109-000034-00	912400135770
CM-150 CA, Surface Mount, Three-Wire Terminal, 24V, IP66	109-000034-02	912400135772
XITANIUM 100W 24V Power Supply	309-000001-00	912400130191
eW Flex SLX In-lin On/Off Power Adapter	107-000008-00	910503700068

Specifications and information

Products	Lens options	Node spacing	Power consumption	Lumens per node
Flex Micro gen3, RGB	Clear Flat Lens Clear and Translucent Dome Lens	102 mm (4 in) 305 mm (12 in)	0.43 W per node, 22 W per 50 node string	3.8 to 7.7
Flex Micro, eW	Clear and Translucent Dome Lens	102 mm (4 in) 305 mm (12 in)	0.5 W	18 to 28

General information

Viewing Angles	105°, 165°	
LED Channels	RGB—Red/Green/Blue eW—2700 K, 3000 K, 3500 K, 4000 K, 5000 K, 5700 K, or 6500 K	
Input Voltage	**24 VDC via** sPDS-60ca 24V (Flex Micro, eW) sPDS-480ca 24V (Flex Micro, eW) PDS-60ca 24V (Flex Micro, eW) CM-150 CA 24V (Flex Micro, eW) **7.5 VDC via** sPDS-480ca 7.5V (Flex Micro gen3, RGB) PDS-60ca 7.5V (Flex Micro gen3, RGB) CM-150 CA 7.5V (Flex Micro gen3, RGB)	
Housing Material	Polycarbonate	
Lens	UV-protected polycarbonate	
Approbations	UL/cUL, FCC Class A, CE	
Environment	Dry/Damp/Wet Location, IP66	
Weight	1.48 kg (3.3 lb)	
Dimensions	**Flat Lens**	**Dome Lens**
	14 x 16 x 16 mm (0.5 x 0.63 x 0.63 in)	19 x 16 x 16 mm (0.75 x 0.63 x 0.63 in)

For further information

Complete details of every family, including part numbers, installation instructions, specification sheets, .ies files, and product drawings, can be found on the respective product pages.

Flex Micro gen3, RGB

Flex Micro, eW

Dimensions

Flat Lens

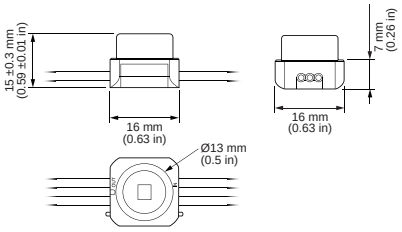

Dome Lens

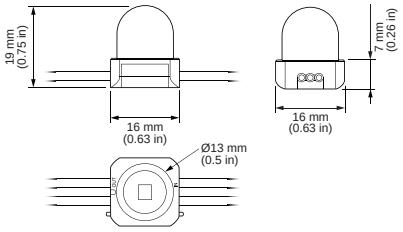

Mounting Accessories

Mounting Track Accessory

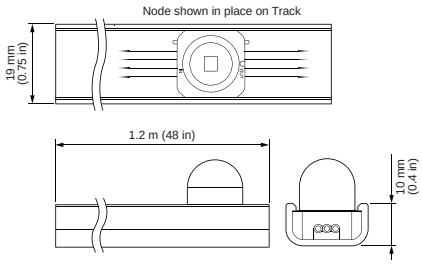

Single Node Accessory

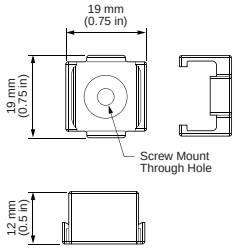

Configuration and planning

Regardless of the size and complexity of your installation, the planning time you spend up front can help streamline the installation and configuration of your luminaires. Keep these points in mind as you plan your installation:

Which Power/Data Supplies are right for your luminaires?
Download the **Color Kinetics Product Guide**.

Want to display video on your structure?
You may be a lighting designer who wants to tap the power of video, a municipality that wants to turn a landmark into an icon, or a building owner/manager who wants to draw attention to your office tower, stadium, casino, or other structure. Before you dive into video, there are some initial questions you need to ask yourself, key elements you'll need to create a complete solution, and some specific technical considerations that you need to address by reading **Color Kinetics Video Guidelines**.

Configuration Calculator
Create a lighting design plan that identifies and locates all luminaires, Data Enabler Pro devices, and controllers. Use **Configuration Calculator** to determine how many luminaires you can install in a single run, and the maximum distances between Data Enabler Pro devices, luminaires, and controllers.

QuickPlay Pro 2
Flex luminaires operate in 8-bit mode by default. To address luminaires, including switching between 8-bit mode and 16-bit mode, download **QuickPlay Pro 2**.

Additional considerations
Determine whether to address luminaires and configure your lighting system offline or interactively. With offline configuration, you stage and configure your system off-site, prior to installation. Offline configuration can be convenient when luminaires are to be installed in multiple locations or locations with difficult access. Interactive configuration is typically performed by an experienced technician, after luminaires have been installed. The interactive method can save time, since you only connect and test your luminaires once.

Accessories

	Item Number	Item 12NC
Leader Cable, 7.6 m (25 ft), Black	108-000045-00	910503700696
Leader Cable, 15.2 m (50 ft), Black	108-000045-01	10503700697
Leader Cable, 30.5 m (100 ft), Black	108-000045-02	910503700698
Leader Cable, 4-Wire, 15.2 m (50 ft) (for use with CM-150 CA Item # 109-000033-01)	108-000080-01	912400135907
Leader Cable, 4-Wire, 30.5 m (100 ft) (for use with CM-150 CA Item # 109-000033-01)	108-000080-02	912400135908
Flex SLX Adapter, 3-Wire, 305 mm (1 ft) (for use with CM-150 CA Item # 109-000033-03)	108-000084-00	912400135913
Leader Cable, 3-Wire, 305 mm (1 ft) (for use with CM-150 CA Item # 109-000033-03)	108-000081-01	912400136051
Leader Cable, 3-Wire, 7.6 m (25 ft) (for use with CM-150 CA Item # 109-000033-03)	108-000081-00	912400135909
Leader Cable, 4-Wire, 15.2 m (50 ft) (for use with CM-150 CA Item # 109-000034-01)	108-000082-01	912400135910
Leader Cable, 4-Wire, 30.5 m (100 ft) (for use with CM-150 CA Item # 109-000034-01)	108-000082-02	912400135911
Leader Cable, 3-Wire, 7.6 m (25 ft) (for use with CM-150 CA Item # 109-000034-03)	108-000083-00	912400135912
Mounting Track, 1.2 m (4 ft), Black	101-000024-01	910503700016
Mounting Track, 1.2 m (4 ft), White	101-000024-00	910503700015
Single-Node Mounts, Quantity 50, Black	101-000039-01	910503700026
Single-Node Mounts, 50 mounts, White	101-000039-00	910503700025
Spacers, Qty 50, 305 mm (4 in), Black	101-000047-01	910503700031
Spacers, Qty 50, 102 mm (4 in), White	101-000047-00	910503700030
Spacers, Qty 50, 305 mm (12 in), Black	101-000048-01	910503700033
Spacers, Qty 50, 305 mm (12 in), White	101-000048-00	910503700032
Power Supplies		
PDS-60ca 7.5v, Pre-programmed	109-000015-00	910503700093
PDS-60ca 24V, Power/Data Supply, Pre-programmed	109-000016-00	910503700095
PDS-60ca 7.5v, DMX/Ethernet	109-000015-03	910503700094
PDS-60ca 24V Power/Data Supply, DMX/Ethernet	109-000016-04	912400133526
sPDS-60ca 24V Power/Data Supply, DMX/Ethernet (NA Power Cord)	109-000021-04	912400133527
sPDS-60ca 24V Power/Data Supply, DMX/Ethernet (EU/CE Power Cord)	109-000021-05	912400133636
sPDS-480ca 7.5v, Ethernet	109-000022-00	910503700107
sPDS-480ca 24V Power/Data Supply, Ethernet	109-000026-01	912400133528
CM-150 CA, DIN Rail Mount, Four-Wire Terminal, 7.5/12V, Control Module	109-000033-01	912400135767
CM-150 CA, DIN Rail Mount, Three-Wire Terminal, 7.5/12V, Control Module	109-000033-03	912400135769
CM-150 CA, Surface Mount, Four-Wire Terminal, 7.5/12V, Control Module	109-000034-01	912400135771
CM-150 CA, Surface Mount, Three-Wire Terminal, 7.5/12V, Control Module	109-000034-03	912400135773
CM-150 CA, DIN Rail Mount, Four-Wire Terminal, 24V	109-000033-00	912400135766
CM-150 CA, DIN Rail Mount, Three-Wire Terminal, 24V	109-000033-02	912400135768
CM-150 CA, Surface Mount (IP66), Four-Wire Terminal, 24V	109-000034-00	912400135770
CM-150 CA, Surface Mount (IP66), Three-Wire Terminal, 24V	109-000034-02	912400135772
eW Flex SLX In-lin On/Off Power Adapter	107-000008-00	910503700068
XITANIUM 100W 24V Power Supply	309-000001-00	912400130191

COLORKINETICS

www.colorkinetics.com

DAS-000248-00 R05 13 August 2021