SCOPE LED
FAST JACK FIXTURE HEAD

DESIGNED BY GREGORY KAY | ASSEMBLED IN AMERICA

REV 01.15.20

FJ-SCO-1-SN
Satin Nickel

FJ-SCO-1-PN
Polished Nickel

FJ-SCO-1-BZ
Antique Bronze

FJ-SCO-1-WH
White

Description:
The Scope LED, a classic flat-back cylinder fixture, tilts 90° vertically. The cool-to-the-touch rotating lens allows adjustment of the beam angle from 20° spot to 50° flood while the fixture is lit. Fixture includes 5 year warranty.

Finish & Material:

PN	SN	BZ	WH
Polished Nickel	Satin Nickel	Antique Bronze	White

Lens:
Adjustable TRI Lens gives a smooth uniform beam at 20° and 50° beam spreads

Application:
Suitable for damp or dry location, interior use only

LED Lamp Specifications:
Total Wattage: 9.3 Watt
Color Termp: 3000K
CRI: 92+
Lumens: 360lm
Lumen Per Watt: 32lm/w

Power Supply in Canopy:
120V input-12VAC output, ELV electric low voltage power supply (FJ and M fixtures order power supply separately)

Dimming:
- Dimmable to 1% Percent of Flicker <25%
- Triac and ELV dimming standard. Compatible with Lutron Diva, Skylark and Legrand ELV dimmers

Compliance Label:
ETL (Conforms to UL1598 and CSA 22.2 #250.0)

Warranty:
5 year warranty. See PureEdgeLighting.com

20° Scope

D	FC	DIA.
4'	109	1.4'
6'	48	2.1'
8'	27	2.8'
10'	17	3.5'

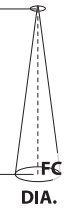

50° Scope

D	FC	DIA.
4'	37	3.7'
6'	17	5.6'
8'	9	7.5'
10'	6	9.3'

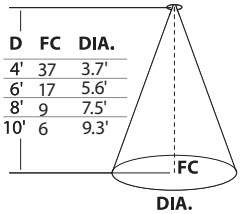

System		Fixture		Stem Height		Finish
FJ	-	SCO	-	1	-	SN

FJ Fast Jack
M Monorail
MP2R Mono-point 2" Round Canopy
MP4R Mono-Point 4" Round Canopy
2P4R 2 Port 4" Round Canopy
2P8R 2 Port 8" Round Canopy
3P8R 3 Port 8" Round Canopy
3P12R 3 Port 12" Round Canopy
2P12RE 2 Port 12" Rectangle Canopy
3P12RE 3 Port 12" Rectangle Canopy

SCO Scope

1 1" (2.5cm)

BZ Antique Bronze
SN Satin Nickel
PN Polished Nickel
WH White (Only with FJ canopy)

PROJECT		FIXTURE TYPE		DATE	

SCOPE LED
FAST JACK FIXTURE HEAD

DESIGNED BY GREGORY KAY | ASSEMBLED IN AMERICA

REV 01.15.20

NC2

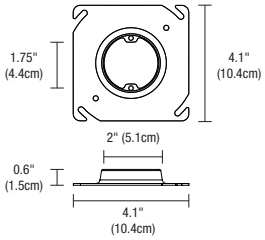

RM2

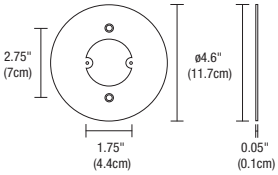

NEW CONSTRUCTION & REMODEL
2" COVER FOR 4" SQUARE JUNCTION BOX

NC2 included with the 2" Round Canopies. NC2 New Construction Junction Box Cover mounts to a standard 4" Electrical Box or Octagon Box, converting it to a 2" Plaster Ring for a 2" Round or Square Canopy. The RM2-Jbox Remodel Plaster Plate cover is used with the existing 4" Square Junction Box and Round Plaster Ring.

System		Type
NC2	–	JBOX

NC2 New Construction 2"
RM2 Remodel Plaster Plate
JBOX Junction Box Cover

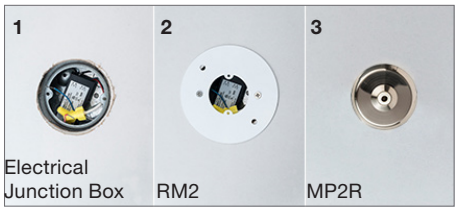

1. Existing 4SQ J-box with Round Plaster Ring
2. Add RM2 Remodel Plate with Power Supply from MP2R fixture
3. Plaster and paint ceiling, then add Canopy and fixture

FAST JACK (CONNECTOR ONLY)

FJ-SCO-1-SN
Scope with Fast Jack
Shown in Satin Nickel

MONORAIL (CONNECTOR INCLUDED)

M-SCO-1-SN
Monorail (M) with Scope
Shown in Satin Nickel

MONOPOINT 2" ROUND FLAT CANOPY

MP2R-SCO-1-SN
Mono-Point 2" Round Canopy with Scope
Shown in Satin Nickel

MONOPOINT 4" ROUND FLAT CANOPY

MP4R-SCO-1-WH
Mono-Point 4" Round Canopy with Scope-
Shown in White

MONOPOINT 4" ROUND SURFACE CANOPY

MP4RS-SCO-1-SN
Mono-Point 4" Surface Mount Canopy with
Scope Shown in Satin Nickle

MULTIPOINT, 3-PORT 8" ROUND CANOPY

3P8R-SCO-1-SN
3-Port 8" Round Canopy with Scope
Shown in Satin Nickel

MULTIPOINT, 3-PORT 12" ROUND CANOPY

3P12R-SCO-1-SN
3-Port 12" Round Canopy with Scope
Shown in Satin Nickel

MULTIPOINT, 2-PORT 12" RECTANGLE CANOPY

2P12RE-SCO-1-SN
2-Port 12" Rectangle Canopy with Scope
Shown in Satin Nickel

MULTIPOINT, 3-PORT 12" RECTANGLE CANOPY

3P12RE-SCO-1-SN
3-Port 12" Rectangle Canopy with Scope
Shown in Satin Nickel

PROJECT		FIXTURE TYPE		DATE	

Canopy Diagrams: Canopy diagrams and measurements for Scope LED

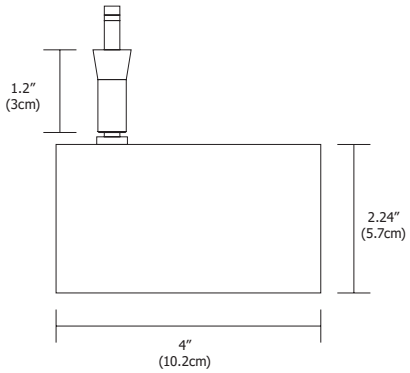

FJ-SCO

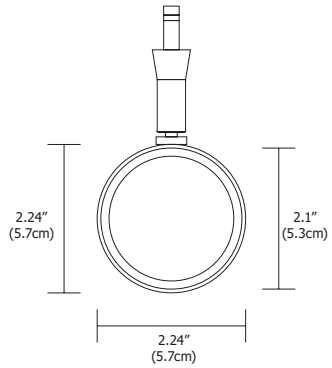

FJ-SCO

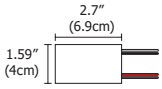

TE-60L-12
60 watt 12VAC power supply included
fits in canopy

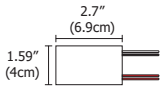

TE-60L-12
60 watt 12VAC power supply included
fits in jbox

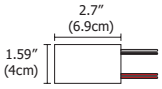

TE-60L-12
60 watt 12VAC power supply included
fits in jbox

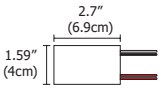

TE-60L-12
60 watt 12VAC power supply included
fits in jbox

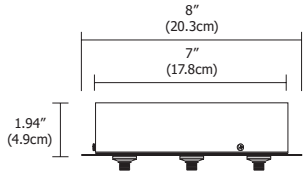

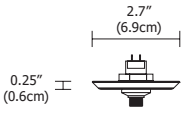

MP2R

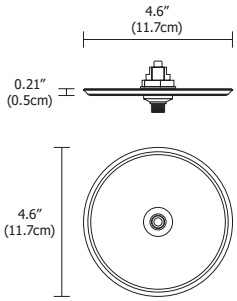

MP4R

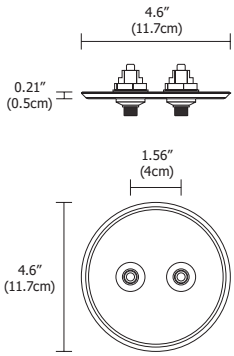

2P4R

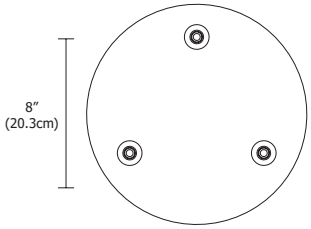

3P8R

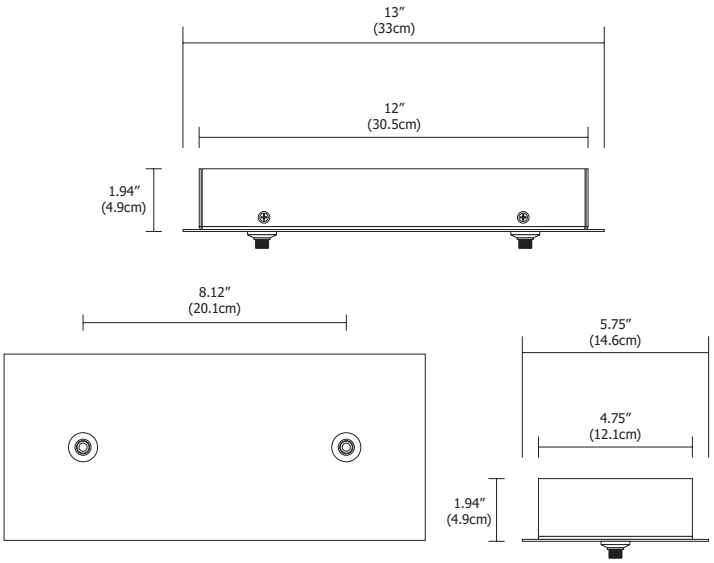

2P12RE

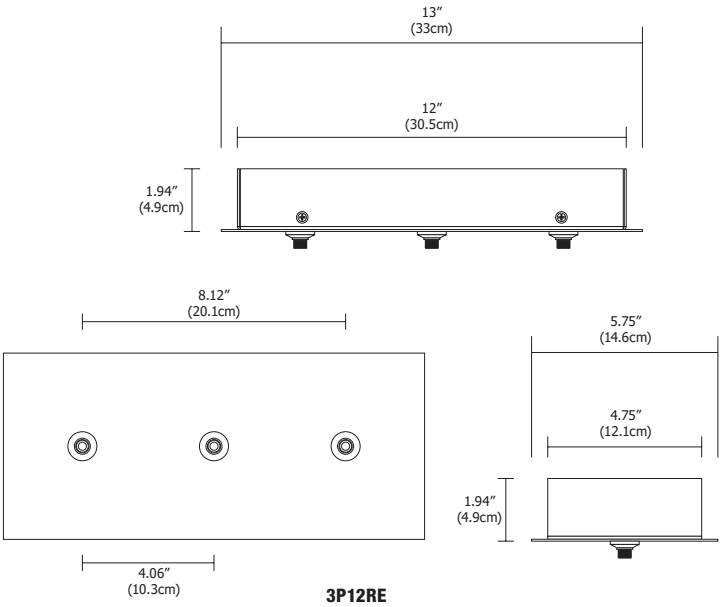

3P12RE

PROJECT		FIXTURE TYPE		DATE	

3000K | Rf: 90 | Rg: 103.5

COLOR VECTOR GRAPHIC

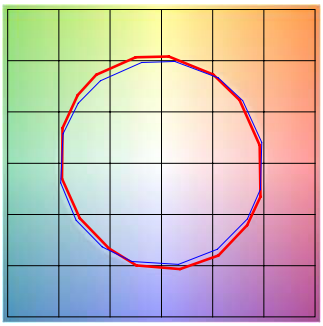

Test Reference

		GRAPHIC SHIFTS %	
HUE BIN	Rf	CHROMA	HUE
1	92.5	-2.4%	-2.4%
2	93.6	-2.3%	2.1%
3	87.2	-0.1%	6.0%
4	86.9	3.8%	6.5%
5	90.1	6.0%	4.8%
6	88.1	7.1%	-0.0%
7	85.9	4.9%	-6.5%
8	90.7	1.6%	-5.3%
9	92.7	-1.9%	-3.9%
10	91.2	-3.9%	0.3%
11	88.6	-2.4%	6.4%
12	88.1	3.0%	4.9%
13	92.2	4.8%	0.7%
14	90.9	5.8%	-2.6%
15	89.4	3.2%	-5.3%
16	89.7	1.2%	-7.3%

PROJECT		FIXTURE TYPE		DATE	