SPECIFICATIONS

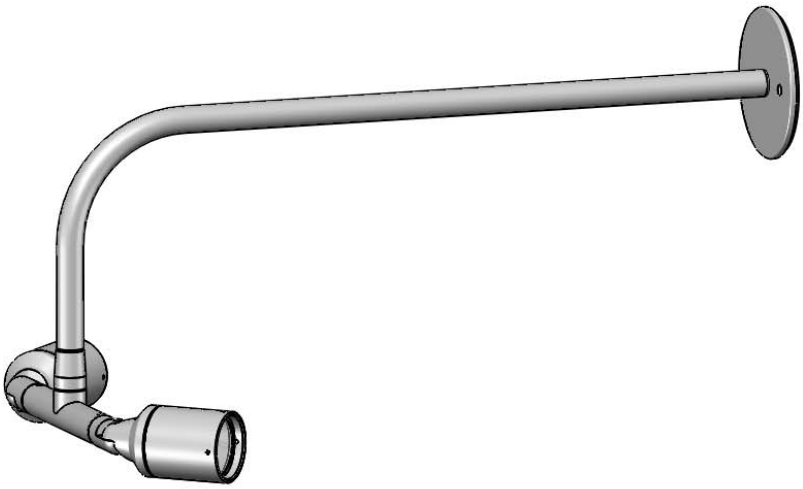

DESCRIPTION:
Dual MR16 halogen sign light with a "T" mount and 24" bent post. Suitable for wet/damp/dry location installations.

MATERIAL:
Standard overall material is 6061 aluminum.
HL-727 - Machined Aluminum

FINISH:
AA - Anodized Satin Aluminum
AP - Powder Coat Aluminum
BK - Powder Coat Black
BZ - Powder Coat Bronze
WT - Powder Coat White

HALOGEN LAMPING OPTION:
Lamp Type - 12V halogen MR16 lamp, bi-pin GX5.3 base, 50W max, not included.

LED OPTIONS:
Integral high output LED, warm white (3000K CCT) standard, others available.
3LED - 3W LED
8LED - 8W LED
Optics
SP - Spot, 12º
NF - Narrow Flood, 24º
FL - Flood, 36º

VOLTAGE:
12 - 12 VAC output transformer required, not included.

MOUNTING:
Fixture is equipped with a 4.75" mounting plate and (2) mounting screws.

OPTIONS:
Glare shields
GL-10 - Short Angled, aluminum
GL-11 - Angled, aluminum
GL-13 - Straight, aluminum
Lenses/Louvers/Color Filters
LA-1 - Hexcell Louver (Black)
LA-2 - Prismatic lens
LA-3 - Linear spread lens
LA-4 - Soft focus lens (diffused)
LA-5 - Moonlight lens
LA-6 - Blue lens
See fixture accessories for more information.

SAMPLE ORDER SPECIFICATION:
HL-727-AA-10-GL-11-LA-5

RATING:
Wet/damp/dry location.

Intertek

MADE IN THE USA

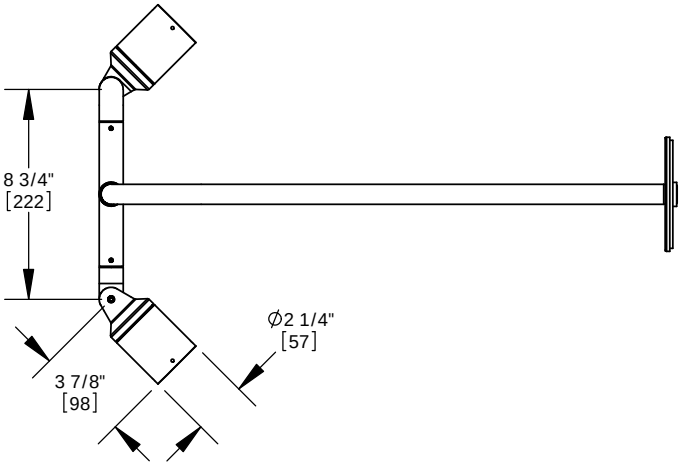

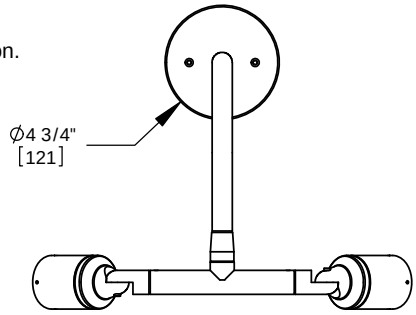

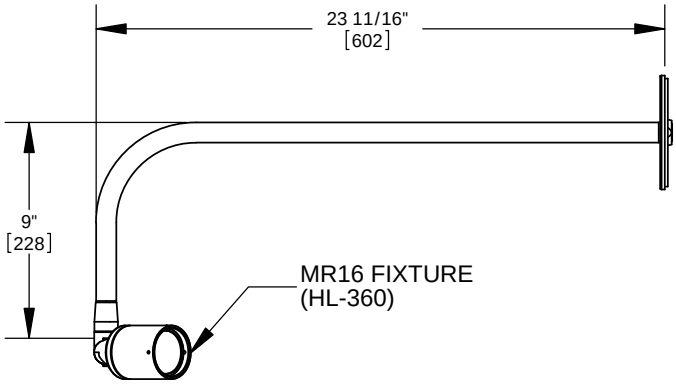

ORDER SPECIFICATION: _____ - _____ - _____ - _____ - _____
Fixture Finish Lamping Voltage Options/Access.

PROJECT:

APPROVED:

NOTE:

TYPE:

HEVI LITE, INC.
9714 Variel Ave, Chatsworth, CA 91311
Tel., (818) 341-8091 - Fax (818) 998-1986
Web Site http://www.hevilite.com

CATALOG NUMBER:
HL-727

THE INFORMATION CONTAINED IN THIS DRAWING IS THE SOLE PROPERTY OF HEVI LITE, INC. ANY REPRODUCTION IN PART OR WHOLE WITHOUT THE WRITTEN PERMISSION OF HEVI LITE, INC. IS PROHIBITED.