GD2DR

2" Gravity LED Downlight

JOB NAME		CATALOG NUMBER	
NOTES		TYPE	

ELECTRICAL DATA

LED Light Engine	Nominal Delivered Lumens*	System Wattage**
L1	850lm @ 3000K / 82CRI	10 Watts
L2	1200lm @ 3000K / 82CRI	15 Watts
L3	1500lm @ 3000K / 82CRI	20 Watts

* Delivered Lumens will vary depending on CCT, CRI, optic and reflector finish.
** System Wattage includes driver and LED Module consumption.

FEATURES
- Dedicated High performance 7° Narrow Spot
- Field changeable 16° to 60° Optics
- Integral field changeable accessory holder
- In-field adjustable module height accommodates ½" to 1-¼" ceiling thickness

LED LIGHT ENGINE
- 10W, 15W & 20W
- 7° Optic: 3 SDCM, 92CRI in 2700K, 3000K & 3500K
- 16° to 60° Optics: 2 SDCM, 82/92CRI in 2700K, 3000K, 3500K & 4000K
- Rated life of >50,000 hours L70 based on LED testing per LM-80-08 and projected values using IESNA TM21-11

OPTICS
- Dedicated 7° Narrow Spot
- Field changeable 16° Spot, 24° Narrow Flood, 36° Flood, 48° Wide Flood and 60° Very Wide Flood
- Accepts (2) field changeable filter media

ELECTRICAL SYSTEM
- 120V/277V input; Power factor >.9, 50/60Hz
- This product complies with IEEE C62.41 for surge endurance up to 2.5KV. Additional surge protection recommended. Damage from power surge is not covered by warranty.

HOUSING
- Heavy duty black powder coated 18 gauge steel frame
- Accommodates ½" to 1-¼" Ceilings
- Integral driver compartment with below ceiling access

EMERGENCY BACKUP
- Remote test switch included. External Battery operates LED load @ 7-25 nominal delivered Lumens. Servicing requires above ceiling access.
- Available with IC and AIC housings only.

INSTALLATION
- IC and Non-IC Rated housing types, must specify. (Remodel housings are Non-IC only) Non-IC rated housings must be kept at a minimum of 3" away from insulation
- Remodel housings requres 5-½" of plenum space for installtion and serviceing.
- Adjustable (10-¾" to 25") joist/ grid ceiling bar hangers included (Hanger bars does not allow for height adjustments)

REFLECTOR
- Specification grade 1.0mm spun aluminum reflector
- Deep cone option for maximum visual comfort and 15° of adjustability
- Reflector available in black, white, haze and wheat finishes (Consult factory for other finishes)
- Architectural, discrete polished self flange (**Note:** Not available with trimless trims)

DIMMING
- Phase dimming, Forward 1% & Reversed 5% (120V only)
- 0-10V 1% Dimming 1%
- EldoLED SOLOdrive 0-10V 0.1%
- EldoLED ECOdrive 0-10V 1%
- Lutron® LDE1 Hi-Lume 1% EcoSystem LED driver with Soft-on, Fade-to-Black dimming technology
- Lutron® LTEA2W Hi-lume 1% 2-Wire LED driver (120V forward phase only)

REMOTE BOX
- Remote box included when required by specification (eldoLED or Lutron dimming option). Available with IC and AIC housings only.
- Above ceiling access required for servicing
- Galvanized steel construction with separate line voltage and low voltage wiring compartments
- 50ft remote distance maximum

LISTING / WARRANTY
- 5-Year Intense LED Limited Warranty
- ETL Listed to US and Canadian standards for damp locations
- (-IC / -AIC Only) ETL listed for direct contact w/insulation
- (-AIC Only) Air-Tight Certified ASTM E283.
- (-AIC Only) Can be used to comply with Title 24, Part 6, JA8 high efficacy LED light source requirements

Trimmed Reflectors

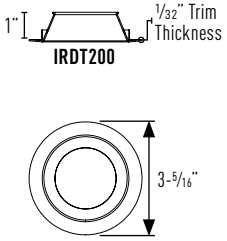

Ceiling Cutout: 2-⅞"

Trimless Reflectors

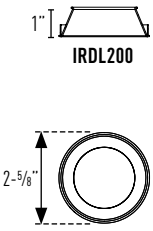

Ceiling Cutout: 2-⅞"

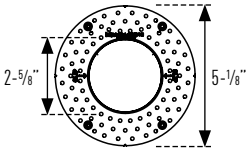

Trimless Mud Flanged:
Perforated collar for seamless and trimless mounting. Must be ordered separately and can only be used in conjunction with trimless trims.

Available Trim Finishes

Housing Part Number: (Example: GD2DRNCL1279DIMSP)

Housing	Installation Type	Wattage	CCT / CRI	Dimming	Voltage	Optic	Options
☐ **GD2DR**	☐ **NC** (New Cons Non-IC) ☐ **NIC**[1] (New Cons IC-Rated) ☐ **NAIC**[1] (New Cons Air-Tight IC) ☐ **RC** (Remodel Non-IC)	☐ **L1** (10W) ☐ **L2** (15W) ☐ **L3** (20W)	☐ **27** (2700K / 82CRI) ☐ **279** (2700K / 92CRI) ☐ **30** (3000K / 82CRI) ☐ **309** (3000K / 92CRI) ☐ **35** (3500K / 82CRI) ☐ **359** (3500K / 92CRI) ☐ **40** (4000K / 82CRI) ☐ **409** (4000K / 92CRI)	☐ **DIM**[2] (Phase Dimming) ☐ **D101** (0-10V Dimming 1%) ☐ **ED10V1**[1,3] (eldoLED 0-10V 1%) ☐ **ED10V01**[1,3] (eldoLED 0-10V 0.1%) ☐ **LUT**[1,3] (Lutron® LDE1 EcoSystem 1%) ☐ **LUT2**[1,2,3] (Lutron® LTEA2W 2-Wire 1%)	☐ blank (120V) ☐ **27** (277V)	☐ **NS**[4] (7° NSP) ☐ **SP** (16° SP) ☐ **NF** (24° NFL) ☐ **FL** (36° FL) ☐ **WF** (48° WFL) ☐ **VF** (60° VFL)	☐ **EM7**[1,3,5] (7W Emergency Backup IOTA part #ILB-CP07-A)

Reflector Part Number: (Example: IRDT200W-SF)

Reflector	Reflector Finish	Trim
☐ **IRDT200** (1" Regress Trim) ☐ **IRDL200**[6] (1" Regress Trimless)	☐ **W** (White) ☐ **B**[7] (Black) ☐ **HZ** (Haze) ☐ **WHT**[7] (Wheat)	☐ **-SF** (Self Flanged) ☐ blank[6] (Trimless)

Optional Accessory

☐ **GD2R-MR**[6] Round Trimless Mud Ring

Filter Media

☐ **PFL2-45** Hex Louver
☐ **PFL4-45** Soft Focus Film
☐ **PFL-LS-45** Linear Spread

Notes:
1. Not available with L3
2. Available in 120V only
3. Remote driver box required for eldoLED, Lutron and EM back up. Compatible with IC and AIC rated housings only.
4. 7° Narrow spot not available in L3, 4000K or 82CRI.
5. Emergency backup available with IC and AIC housings only
6. Trimless options are for use with mud ring accessory only
7. Consult factory for lead times

Intense Lighting
3340 E La Palma Ave, Anaheim, CA 92806 | **tel** 714 630-9877 | **fax** 714 630-9883
©2022 Intense Lighting, LLC. All rights reserved. Subject to change without notice.

intense LIGHTING | a LEVITON company

GD2DR

2" Gravity LED Downlight

JOB NAME		CATALOG NUMBER	
NOTES		TYPE	

New Construction Dimension (IC & Non-IC):

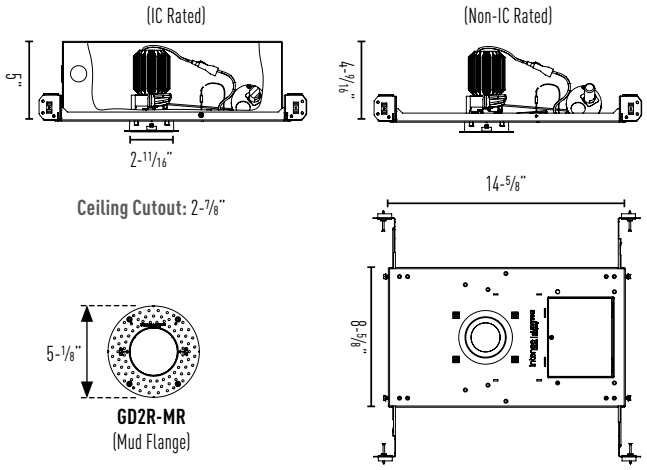

Remodel Dimension (Non-IC):

Remodel housings requres 5-1/2" of plenum space for installtion and serviceing.

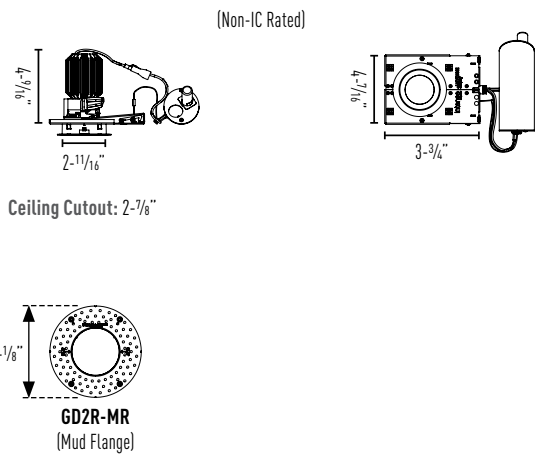

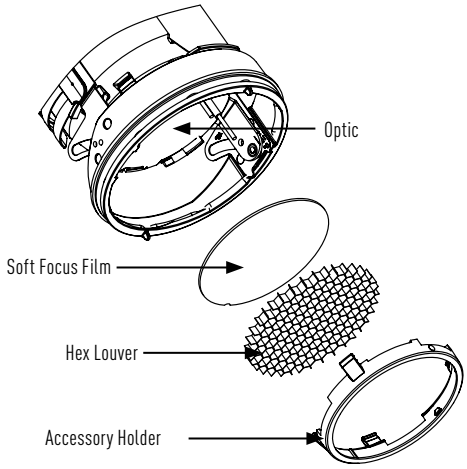

Optics

Dedicated 7° Narrow Spot with Field changeable 16° to 60° Optics

- ☐ **IP-OP45NS** (7° Narrow Spot)
- ☐ **IP-OP45SP** (16° Spot)
- ☐ **IP-OP45NF** (24° Narrow Flood)
- ☐ **IP-OP45FL** (36° Flood)
- ☐ **IP-OP45WF** (48° Wide Flood
- ☐ **IP-OP45VF** (60° Very Wide Flood)

Accessories

- ☐ **PFL2-45** Hex Louver
- ☐ **PFL4-45** Soft Focus Film
- ☐ **PFL-LS-45** Linear Spread

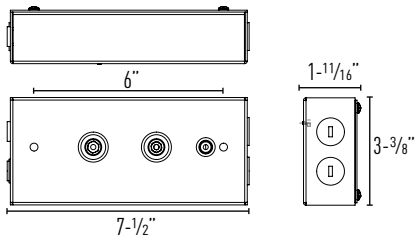

Remote Mounted Driver

(For use with IC/AIC housings with eldoLED or Lutron dimming option)

- Remote box included when required by specification (eldoLED or Lutron dimming option). Available with IC and AIC housings only.
- Above ceiling access required for servicing
- Galvanized steel construction with separate line voltage and low voltage wiring compartments
- 50ft remote distance maximum

Remote Driver Box For Dimming Options

eldoLED 0-10V 1%
eldoLED 0-10V 0.1%
Lutron® LDE1 EcoSystem 1%
Lutron® LTEA2W 2-Wire 1%

Note: Wires for class 2 LED driver require a minimum of 18 awg wire at a maximum of 50 feet length per local and national electrical regulations.

Intense Lighting
3340 E La Palma Ave, Anaheim, CA 92806 | **tel** 714 630-9877 | **fax** 714 630-9883
©2022 Intense Lighting, LLC. All rights reserved. Subject to change without notice.

intense® LIGHTING | a LEVITON® company

GD2DR

2" Gravity LED Downlight

JOB NAME		CATALOG NUMBER	
NOTES		TYPE	

IRDT200WL2

Report #: ILL-20190114-1 (7)

LED PACKAGE MULTIPLIERS:
IRDT200WL1 (x 0.84)

IRRT200 (5/8" REGRESS)
Trim Multiplier (x 0.99)

CCT MULTIPLIERS:

	82CRI
2700K	(x 0.93)
3000K	(x 1.00)
3500K	(x 1.00)

7° Narrow Spot

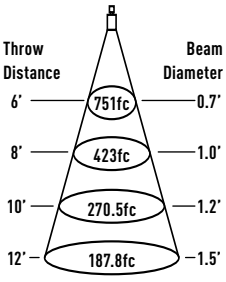

Watts: 16 **LPW:** 43.2
Lumens: 691 **CCT:** 3000K

Intensity	
Degree	**CBCP**
0°	27046
5°	6552
15°	380
25°	69
35°	17
45°	7

IRDT200WL3

Report #: ILL-20190114-1 (16)
ILL-20190114-1 (24)
ILL-20190114-1 (36)
ILL-20190114-1 (48)
ILL-20190114-1 (60)

LED PACKAGE MULTIPLIERS:
IRDT200WL1 (x 0.58)
IRDT200WL2 (x 0.82)

IRRT200 (5/8" REGRESS)
Trim Multiplier (x 0.99)

CCT MULTIPLIERS:

	82CRI	92CRI
2700K	(x 0.93)	(x 0.76)
3000K	(x 1.00)	(x 0.87)
3500K	(x 1.00)	(x 0.87)
4000K	(x 1.00)	(x 0.87)

16° Spot

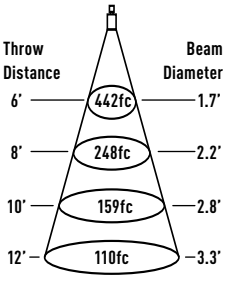

Watts: 20 **LPW:** 79.4
Lumens: 1589 **CCT:** 3000K

Intensity	
Degree	**CBCP**
0°	15914
5°	13019
15°	1498
25°	276
35°	44
45°	13

24° Narrow Flood

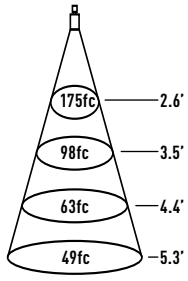

Watts: 20 **LPW:** 76
Lumens: 1527 **CCT:** 3000K

Intensity	
Degree	**CBCP**
0°	6324
5°	5589
15°	2374
25°	607
35°	148
45°	25

36° Flood

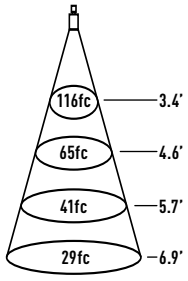

Watts: 20 **LPW:** 74
Lumens: 1497 **CCT:** 3000K

Intensity	
Degree	**CBCP**
0°	4199
5°	3903
15°	2274
25°	789
35°	233
45°	44

48° Wide Flood

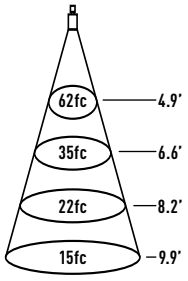

Watts: 20 **LPW:** 69
Lumens: 1390 **CCT:** 3000K

Intensity	
Degree	**CBCP**
0°	2246
5°	2166
15°	1676
25°	924
35°	385
45°	103

60° Very Wide Flood

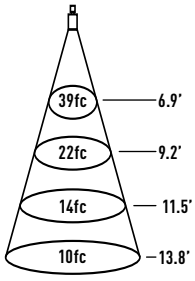

Watts: 20 **LPW:** 66
Lumens: 1333 **CCT:** 3000K

Intensity	
Degree	**CBCP**
0°	1435
5°	1393
15°	1242
25°	921
35°	504
45°	170

Intense Lighting
3340 E La Palma Ave, Anaheim, CA 92806 | **tel** 714 630-9877 | **fax** 714 630-9883
©2022 Intense Lighting, LLC. All rights reserved. Subject to change without notice.

intense LIGHTING | a LEVITON company