KIM LIGHTING

ARX16 Without Lens

ArcheType® X Site/Area

kl_arx16_nolens_spec.pdf

JOB _____ TYPE _____

NOTES _____ APPROVALS _____

FEATURES

- Independently aim able LEAR™ modules
- 355° rotation and 70° tilt module adjustment
- Wide range of drive currents available
- Design software interface for user-defined Type X distribution creation
- Traditional NEMA distributions available
- IP66 rated LEAR module and driver

Certifications

c UL us LISTED

ida DARK SKY APPROVED 2016 — 3000K and warmer CCTs only

IK09

DLC QPL LISTED

SPECIFICATIONS

Max Weight = 39lbs.

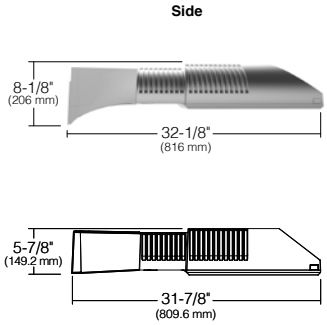

Side - EPA 1.126

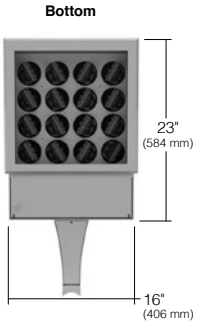

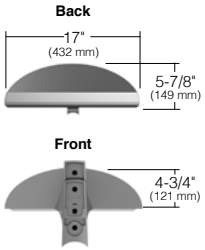

Front - EPA 0.592

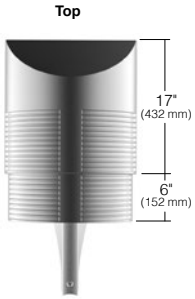

EPA 2.856

ORDERING CODE

ARX16

Configuration

			EPA
	1SA	1 Arm Side Mt.	0.8
	2SB	2 Arm Side Mt.	1.7
	2SL	2 Arm Side Mt.	1.6
	3ST	3 Arm Side Mt.	2.4
	3SY*	3 Arm Side Mt.	1.8
	4SC	4 Arm Side Mt.	2.4
	1W	Single Wall Mt.	0.8
	HSF	Horizontal Slip Fitter	0.3

*Available round poles only. EPA is for Fixture only

Fixture

ARX16

Distribution

- **1** Type I
- **2** Type II
- **3** Type III
- **4** Type IV
- **5** Type V
- **L** Left
- **R** Right
- **X** Type X[1] — Type X IES File Name

Electrical Module

Color Temperature	Drive Current	Drive Current	Voltages
3K 3000K	**35** 350mA	**75** 750mA	**UV** 120-277V
4K 4000K	**40** 400mA	**80** 800mA	**347** 347V
5K 5000K	**45** 450mA	**85** 850mA	**480** 480V
	50 500mA	**90** 900mA	
	55 550mA		
	60 600mA		
	65 650mA		
	70 700mA		

Fixture Finish

- **LG** Light Gray
- **BL** Black
- **DB** Dark Bronze
- **GT** Graphite
- **PS** Platinum Silver
- **TT** Titanium
- **WH** White
- **CC** Custom Color[2]

Arm Support

- **US** Upswept
- **ST** Straight

Fuse Options

- **SF** 120, 277, 347 Line Volts
- **DF** 208, 240, 480 Line Volts

NFO Option

- **NFO** Neighbor Friendly Optic

Control Options

Wireless

- **WIR-RMI-IO** 120-480V, 1000' range, wiSCAPE RF control system with on/off/dim, alerts, monitoring and metering capabilities
- **SWP**[3,4,5] SiteSync Wireless Pre-Commission
- **SWPM**[3,4,5] SiteSync Wireless Pre-Commission w/ Occupancy Sensor

Control Accessories

- **SW7PR**[4,5] Site Sync with 7-pin PCR
- **SWUSB**† SiteSync loaded on USB flash drive (Windows® operating system only)
- **SWTAB**† SiteSync Windows® based Tablet
- **SWBRG**† SiteSync Wireless Bridge Node
- **WIR-RME-L** wiSCAPE 7-pin Module
- **NXOFM-1R1D-UNV** NX 7-pin Module

Motion

- **SCL** Fixture Mounted Occupancy Sensor up to 16'
- **SCH** Fixture Mounted Occupancy Sensor 16' to 30'
- **SCL-R** Round Pole Mounted Occupancy Sensor up to 16'
- **SCL-S** Square Pole Mounted Occupancy Sensor up to 16'
- **SCH-R** Round Pole Mounted Occupancy Sensor 16' to 30'
- **SCH-S** Square Pole Mounted Occupancy Sensor 16' to 30'

Mounting Options

- **VSF** Vertical Slipfitter Mount for 2" pipe tenon, (2-3/8" O.D.)
- **SVSF** Vertical Slipfitter Mount square for 2" pipe tenon, (2-3/8" O.D.)

Side Arm Mount

- **3-4RD** 3.3" to 4.2" O.D. round pole
- **4-6RD** 4.5" to 6" O.D. round pole
- **SQ** Square Pole

† When ordering with SiteSync, one of the following interface options must be chosen and ordered separately. Each option contains the SiteSync License, GUI and Bridge Node.

For Pole Spec Select:
http://www.kimlighting.com/products/arms_and_poles/
For Control Spec Select:
http://trpssl.com/index.html

Microsoft, Encarta, MSN, and Windows are either registered trademarks or trademarks of Microsoft Corporation in the United States and/or other countries.

Kim Lighting reserves the right to change specifications without notice.

[1] User-defined distributions must include IES# file where indicated
[2] Custom colors subject to additional charges, minimum quantites and extended lead times. Consult representative.
[3] SiteSync is not compatable with products using 480V option.
[4] Not available with other sensor or wireless control options.
[5] Specify group and zone at time of order. See www.hubbelllighting.com/sitesync for more details. Order at least one SiteSync interface accessory SWUSB or SWTAB. Each option contains SiteSync License, GUI, and Bridge Node.

ARX LEAR™ 4X4 Site/Area

Distribution Type	Photometrics (3000K)															
Field Angle - 10% max	Drive Current															
	350 mA		400 mA		450 mA		500 mA		550 mA		600 mA		650 mA		700 mA	
	Lumens	B-U-G	Lumens	B-U-G	Lumens	B-U-G	Lumens	B-U-G	Lumens	B-U-G	Lumens	B-U-G	Lumens	B-U-G	Lumens	B-U-G
Type 1	10922	B3 U0 G3	12219	B3 U0 G3	13516	B3 U0 G3	14814	B4 U0 G4	16111	B4 U0 G4	17408	B4 U0 G4	18706	B4 U0 G4	20003	B4 U0 G4
Type 2	11209	B3 U0 G3	12540	B3 U0 G3	13872	B3 U0 G3	15203	B3 U0 G3	16534	B3 U0 G3	17866	B3 U0 G3	19197	B3 U0 G3	20529	B3 U0 G3
Type 3	11079	B2 U0 G3	12395	B2 U0 G3	13710	B2 U0 G3	15026	B3 U0 G3	16342	B3 U0 G3	17658	B3 U0 G3	18974	B3 U0 G3	20290	B3 U0 G4
Type 4FT	10079	B1 U0 G2	11276	B1 U0 G2	12473	B1 U0 G2	13670	B1 U0 G3	14867	B1 U0 G3	16064	B1 U0 G3	17261	B1 U0 G3	18459	B1 U0 G4
Type 4W	9377	B2 U0 G2	10491	B2 U0 G3	11605	B2 U0 G3	12696	B3 U0 G3	13833	B3 U0 G3	14947	B3 U0 G3	16060	B3 U0 G3	17174	B3 U0 G3
Type 5N	11744	B4 U0 G2	13139	B4 U0 G2	14534	B4 U0 G2	15928	B4 U0 G3	17323	B4 U0 G3	18718	B4 U0 G3	20113	B4 U0 G3	21508	B4 U0 G3
Type 5M	11015	B4 U0 G3	12324	B4 U0 G3	13632	B4 U0 G3	14913	B4 U0 G3	16249	B4 U0 G3	17557	B4 U0 G3	18865	B4 U0 G3	20174	B5 U0 G3

Distribution Type	Photometrics (4000K)															
Field Angle 10% max	Drive Current															
	350 mA		400 mA		450 mA		500 mA		550 mA		600 mA		650 mA		700 mA	
	Lumens	B U G	Lumens	B U G	Lumens	B U G	Lumens	B U G	Lumens	B U G	Lumens	B U G	Lumens	B U G	Lumens	B U G
Type 1	11412	B3 U0 G3	12767	B3 U0 G3	14123	B3 U0 G3	15478	B4 U0 G4	16834	B4 U0 G4	18189	B4 U0 G4	19545	B4 U0 G4	20900	B4 U0 G4
Type 2	11712	B3 U0 G3	13103	B3 U0 G3	14494	B3 U0 G3	15885	B3 U0 G3	17276	B3 U0 G3	18667	B3 U0 G3	20058	B3 U0 G3	21449	B3 U0 G3
Type 3	11576	B2 U0 G3	12950	B2 U0 G3	14325	B2 U0 G3	15700	B3 U0 G3	17075	B3 U0 G3	18450	B3 U0 G3	19825	B3 U0 G3	21200	B3 U0 G4
Type 4FT	10531	B1 U0 G2	11782	B1 U0 G2	13032	B1 U0 G2	14283	B1 U0 G3	15534	B1 U0 G3	16785	B1 U0 G3	18036	B1 U0 G3	19286	B1 U0 G4
Type 4W	9798	B2 U0 G3	10962	B2 U0 G3	12126	B2 U0 G3	13265	B3 U0 G3	14453	B3 U0 G3	15617	B3 U0 G3	16781	B3 U0 G3	17945	B3 U0 G3
Type 5N	12270	B4 U0 G2	13728	B4 U0 G2	15185	B4 U0 G2	16643	B4 U0 G3	18100	B4 U0 G3	19558	B4 U0 G3	21015	B4 U0 G3	22473	B4 U0 G3
Type 5M	11509	B4 U0 G3	12876	B4 U0 G3	14243	B4 U0 G3	15582	B4 U0 G3	16977	B4 U0 G3	18344	B4 U0 G3	19711	B5 U0 G3	21078	B5 U0 G3

Distribution Type	Photometrics (5000K)															
Field Angle 10% max	Drive Current															
	350 mA		400 mA		450 mA		500 mA		550 mA		600 mA		650 mA		700 mA	
	Lumens	B U G	Lumens	B U G	Lumens	B U G	Lumens	B U G	Lumens	B U G	Lumens	B U G	Lumens	B U G	Lumens	B U G
Type 1	11719	B3 U0 G3	13111	B3 U0 G3	14503	B3 U0 G3	15837	B4 U0 G4	17287	B4 U0 G4	18679	B4 U0 G4	20071	B4 U0 G4	21463	B4 U0 G4
Type 2	12027	B3 U0 G3	13456	B3 U0 G3	14884	B3 U0 G3	16253	B3 U0 G3	17741	B3 U0 G3	19170	B3 U0 G3	20598	B3 U0 G3	22027	B3 U0 G3
Type 3	11865	B2 U0 G3	13275	B2 U0 G3	14684	B2 U0 G3	16064	B3 U0 G3	17503	B3 U0 G3	18912	B3 U0 G3	20322	B3 U0 G3	21731	B3 U0 G4
Type 4FT	10814	B1 U0 G2	12099	B1 U0 G2	13383	B1 U0 G2	14614	B1 U0 G3	15952	B1 U0 G3	17237	B1 U0 G3	18521	B1 U0 G3	19806	B1 U0 G4
Type 4W	10025	B2 U0 G3	11216	B2 U0 G3	12406	B3 U0 G3	13572	B3 U0 G3	14788	B3 U0 G3	15979	B3 U0 G3	17169	B3 U0 G3	18360	B3 U0 G4
Type 5N	12601	B4 U0 G2	14098	B4 U0 G2	15594	B4 U0 G2	17028	B4 U0 G3	18588	B4 U0 G3	20085	B4 U0 G3	21581	B4 U0 G3	23078	B4 U0 G3
Type 5M	11776	B4 U0 G3	13174	B4 U0 G3	14573	B4 U0 G3	15943	B4 U0 G3	17371	B4 U0 G3	18769	B4 U0 G3	20168	B5 U0 G3	21567	B5 U0 G3

Kim Lighting reserves the right to change specifications without notice.

ARX LEAR™ 4X4 Site/Area continued

Distribution Type	Photometrics (3000K)							
Field Angle 10% max	Drive Current							
	750 mA		800 mA		850 mA		900 mA	
	Lumens	B U G	Lumens	B U G	Lumens	B U G	Lumens	B U G
Type 1	20825	B4 U0 G4	21648	B4 U0 G4	22470	B4 U0 G4	23292	B4 U0 G4
Type 2	21372	B3 U0 G3	22216	B3 U0 G3	23060	B3 U0 G3	23904	B3 U0 G3
Type 3	21124	B3 U0 G4	21958	B3 U0 G4	22793	B3 U0 G4	23627	B3 U0 G4
Type 4FT	19217	B1 U0 G4	19976	B1 U0 G4	20735	B1 U0 G4	21494	B1 U0 G4
Type 4W	17880	B3 U0 G3	18586	B3 U0 G3	19292	B3 U0 G4	19962	B3 U0 G4
Type 5N	22392	B4 U0 G3	23277	B4 U0 G3	24161	B4 U0 G3	25045	B4 U0 G3
Type 5M	21003	B5 U0 G3	21832	B5 U0 G3	22662	B5 U0 G4	23448	B5 U0 G4

Distribution Type	Photometrics (4000K)							
Field Angle 10% max	Drive Current							
	750 mA		800 mA		850 mA		900 mA	
	Lumens	B U G	Lumens	B U G	Lumens	B U G	Lumens	B U G
Type 1	21759	B4 U0 G4	22619	B4 U0 G4	23478	B4 U0 G4	24337	B5 U0 G5
Type 2	22331	B3 U0 G3	23213	B3 U0 G3	24095	B3 U0 G3	24976	B4 U0 G4
Type 3	22072	B3 U0 G4	22943	B3 U0 G4	23815	B3 U0 G4	24686	B3 U0 G4
Type 4FT	20079	B1 U0 G4	20872	B1 U0 G4	21665	B1 U0 G4	22458	B2 U0 G4
Type 4W	18682	B3 U0 G4	19420	B3 U0 G4	20158	B3 U0 G4	20857	B3 U0 G4
Type 5N	23397	B4 U0 G3	24320	B4 U0 G3	25244	B4 U0 G3	26168	B5 U0 G3
Type 5M	21945	B5 U0 G3	22812	B5 U0 G4	23678	B5 U0 G4	24500	B5 U0 G4

Distribution Type	Photometrics (5000K)							
Field Angle 10% max	Drive Current							
	750 mA		800 mA		850 mA		900 mA	
	Lumens	B U G	Lumens	B U G	Lumens	B U G	Lumens	B U G
Type 1	22345	B4 U0 G4	23228	B4 U0 G4	24110	B4 U0 G4	24901	B5 U0 G5
Type 2	22933	B3 U0 G3	23838	B3 U0 G3	24744	B3 U0 G3	25555	B4 U0 G4
Type 3	22624	B3 U0 G4	23518	B3 U0 G4	24411	B3 U0 G4	25258	B3 U0 G4
Type 4FT	20620	B1 U0 G4	21435	B1 U0 G4	22249	B1 U0 G4	22978	B2 U0 G4
Type 4W	19115	B3 U0 G4	19870	B3 U0 G4	20625	B3 U0 G4	21340	B3 U0 G4
Type 5N	24027	B4 U0 G3	24976	B4 U0 G3	25924	B4 U0 G3	26774	B5 U0 G3
Type 5M	22453	B5 U0 G3	23340	B5 U0 G4	24227	B5 U0 G4	25067	B5 U0 G4

Kim Lighting reserves the right to change specifications without notice.

ARX LEAR™ 4X4 Site/Area continued

Electrical Characteristics												Dimming				
Current	System Watts	Line Voltage		Amps AC						Min. Power Factor	Max THD (%)	Dimming Range	Source current out of 0-10V purple wire		Absolute voltage range on 0-10V (+) purple wire	
		VAC	Hz	120	208	240	277	347	480				Min	Max	Min	Max
350 mA	110	120-480	50/60	0.92	0.53	0.46	0.40	0.32	0.23	>0.9	20	10% to 100%	0mA	1mA	0V	10V
400 mA	124			1.03	0.60	0.52	0.45	0.36	0.26							
450 mA	138			1.15	0.66	0.58	0.50	0.40	0.29							
500 mA	152			1.27	0.73	0.63	0.55	0.44	0.32							
550 mA	167			1.39	0.80	0.70	0.60	0.48	0.35							
600 mA	182			1.52	0.88	0.76	0.66	0.52	0.38							
650 mA	196			1.63	0.94	0.82	0.71	0.56	0.41							
700 mA	214			1.78	1.03	0.89	0.77	0.62	0.45							
750 mA	231			1.93	1.11	0.96	0.83	0.67	0.48							
800 mA	246			2.05	1.18	1.03	0.89	0.71	0.51							
850 mA	261			2.18	1.25	1.09	0.94	0.75	0.54							
900 mA	278			2.32	1.34	1.16	1.00	0.80	0.58							

TM-21 LIFETIME CALCULATION

Ambient Environment °C	Projected Lumen Maintenance				Reported L70
	16	26	60	TM-21 100	
25	98.21%	97.89%	94.53%	90.71%	>60,000 hrs

LED COLOR

	Spectroradiometric		
	3K	4K	5K
Designation	3000K	4000K	5000K
CRI Minimum	≥72	≥72	≥72
S/P Ratio	1.33	1.66	1.78

Consult factory for Amber, Turtle Friendly, Gulf Coast and Observatory applications.

Kim Lighting reserves the right to change specifications without notice.

SPECIFICATIONS

Housing:

- Low copper aluminum alloy die-casting is designed as one-piece and has external cooling ribs.
- Solid, cast aluminum, wall creates a thermal barrier between the optical and electrical compartments.
- Housing is designed with integral LED module "turrets" utilized for both thermal transfer and for securing the location of each LEAR™ Optical Module. The turrets are spaced in rows of 4 X 4 and are designed to optimize photometric performance for standard and Type X user-defined distributions.
- IP66 rated LEAR module and driver.
- IK09 rated enclosure protects electrical equipment against external mechanical impacts.

Lens Frame:

- One-piece low copper aluminum alloy die-cast is secured to housing with two toolless latches.

Neighbor Friendly Optic

- Optional integrated Neighbor Friendly Optic on each LED module to completely control unwanted backlight. Most effective with Type III and IV distibutions.

Type X LEAR™ Optical Module:

- Turret alignment and thermal transfer design allows for freedom of adjustability and precise aiming of the LEAR LED array.
- Optimized standard distribution or user-defined beam patterns.
- 3000K, 4000K, 5000K standard CCT. Amber and other custom color temperatures available.
- Factory adjusted distributions created from user-defined IES files.
- Toolless 355° rotation adjustment and 70° tilt adjustment with a tamper resistant fastener.
- Type X LEAR modules are IP66 rated and utilize six high output LEDs positioned beneath a precise high purity molded acrylic prism.
- Targeted optics minimize pixilation concerns and provide outstanding performance, uniformity and glare control.

Electrical Components:

- Standard programmable driver allows for programmable drive current settings ranging from 350mA to 900mA.
- Electrical components are stategically located in the driver and gear compartment with a molded silicon grommet seal to provide separation from the optical chamber.
- Maximum lightning surge current 20KA with thermally protected varistor technology. Surge suppression is series circuited preventing total fixture failure.
- Open circuit fault will turn off the luminaire in order to protect the sensitive electronics and acts as a signal for maintenance.
- Programmable Driver is rated for -40°C starting.
- "Thermal Shield", primary side, thermister provides protection for the sustainable life of LEAR modules and electronic components.

Dimming:

- Dimming range from 10% to 100% through the use of the standard 0-10V interface on the programmable driver.
- Modular wiring harness in the service area provides user access to the dimming circuitry.
- Dimming circuitry compatible with 0-10V, user-defined, control devices.
- Optional factory programmed dimming profile.

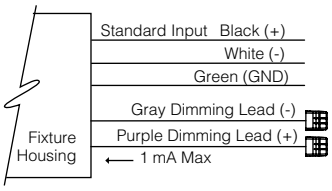

Support Arm:

- Die-cast, low copper aluminum alloy, with splice access cover.
- Die-cast pole adaptor and an internal reinforcing plate are provided with a wire strain relief.
- The arm adapter is square or circular cut for specified pole size and shape.
- For field wire connections, a terminal block is mounted in the arm cavity and accessible behind the splice access cover. The block accepts #14 to #8 wire sizes and is factory prewired to the electrical module's quick-disconnect plug located inside the electrical compartment.

Optional Slip-Fitter:

- Internally accessible slip-fitter attaches to a 1-1/4" to 2-3/8" tenon and allows hands-free wiring and maintenance.

Wall Mount:

- Optional, cast aluminum mounting plate attaches to a wall over a junction box and the speed mount is bolted to the cover plate. To complete the wiring, the luminaire assembly slides over the mounting plate.

Fusing:

SF for 120, 277, and 347 Line volts
DF for 208, 240, and 480 Line volts

Hight temperature fuse holders factory installed inside the fixture housing.
Fuse is included.

Finish:

- Fade and abrasion resistant, electrostatically applied, thermally cured, triglycidal isocyanurate (TGIC) polyester powdercoat.
- Standard colors include (BL) Black, (DB) Dark Bronze, (GT) Graphite, (PS) Platinum Silver, s(LG) Light Gray, (TT) Titanium, (WH) White, and (CC) Custom Color (Include RAL#).

Certifications and Listings:

- UL 1598 Standard for Luminaires.
- UL 8750 Standard for Safety for Light Emitting Diode (LED) Equipment for use in Lighting Products.
- CSA C22.2#250.0 Luminaires.
- ANSI C136.31-2010 4G Vibration tested and compliant.
- RoHS compliant.
- IP66 certified (LED module/driver only).
- IEC 66262 Mechanical Impact Code IK09.
- IDA approved, 3000K and warmer CCTs only.

CAUTION:

- Fixtures must be grounded in accordance with national, state and/or local electrical codes. Failure to do so may result in serious personal injury.

WARRANTY:

- For full warranty see: http://www.hubbelllighting.com/resources/warranty

Kim Lighting reserves the right to change specifications without notice.

Controls

Photocell Receptacle

A25-7

Fully gasketed and wired 7-pin receptacle option. Easy access location above the electrical compartment. 7-pin construction allows for a user-defined interface and provides a controlled definition of operational performance. ANSI twist-lock control module by-others.

Standard customer operation modes:

1. Traditional on/off photoelectric control.
2. 5-pin wireless photoelectric control for added dimming feature.
3. 7-pin wireless photoelectric control for dimming and additional I/O connections for customer use.

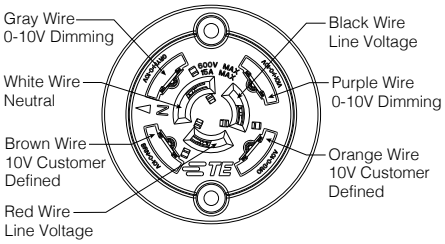

Button Photocell

A30 for 120V, **A31** for 208V, **A32** for 240V, **A33** for 277V, **A35** for 347V, **A34** for 480V,

Photocell is factory installed inside the housing with a fully gasketed sensor on the side wall. For multiple fixture mountings, one fixture is supplied with a photocell to operate the others.

Wireless Controls

wiSCAPE™

Hubbell Control Solution's wiSCAPE™ wireless control modules allow an individual fixture to managed, monitored and measured. The modules communicate securely over a robust certified meshed radio signal. The wiSCAPE modules provide on/off/dim control, external device input, alerts and metering.

WIR-RMI-IO

wiSCAPE Internal Module, 120-480V, 1000ft range (LOS), 3 Digital Inputs/1 Analog Input, 2 Outputs.

WIR-RME-L

wiSCAPE External Module,120-480V, 1000ft range (LOS), Internal Photocell, 1 Digital Input, Compatible with the A-25-7H option

SiteSync™[1]

SiteSync™ wireless control system for reduction in energy and maintenance cost while optimizing light quality 24/7. See ordering information or visit www.hubbelllighting.com/products/sitesync for more details.

Fixture-Mounted

Fixture-Mounted Occupancy Sensor up to 16'

SCL

Fixture-Mounted Occupancy Sensor up to 16' - an outdoor occupancy sensor with 0-10V interface dimming control that mounts directly to the pole. Wide 360° pattern. Module colors are available in Black, Gray, and White.

Ordering Example: SCL/277[2]/BL[3]

Fixture-Mounted Occupancy Sensor 16' to 30'

SCH

Fixture-Mounted Occupancy Sensor 16' to 30'- an outdoor occupancy sensor with 0-10V interface dimming control that mounts directly to the pole. Wide 360° pattern. Module colors are available in Black, Gray, and White.

Ordering Example: SCH/277[2]/BL[3]

Pole Mounted

Round Pole-Mounted Occupancy Sensor up to 16'

SCL-R

Round Pole-Mounted Occupancy Sensor up to 16' - an outdoor occupancy sensor with 0-10V interface dimming control that mounts directly to the pole. Wide 360° pattern. Module colors are available in Black, Gray, and White. Module is cut for round pole mounting. Pole diameter is needed upon order. Poles to be drilled in the field will be provided with installation instructions.

Ordering Example: SCL-R4[4]/277[2]/BL[3]

Square Pole-Mounted Occupancy Sensor up to 16'

SCL-S

Square Pole-Mounted Occupancy Sensor up to 16' - an outdoor occupancy sensor with 0-10V interface dimming control that mounts directly to the pole. Wide 360° pattern. Module colors are available in Black, Gray, and White. Module is cut for square pole mounting. Pole diameter is needed upon order. Poles to be drilled in the field will be provided with installation instructions.

Ordering Example: SCL-L/277[2]/BL[3]

Round Pole-Mounted Occupancy Sensor 16' to 30'

SCH-R

Round Pole-Mounted Occupancy Sensor: 16' to 30' - an outdoor occupancy sensor with 0-10V interface dimming control that mounts directly to the pole. Wide 360° pattern. Module colors are available in Black, Gray, and White. Module is cut for round pole mounting. Pole diameter is needed upon order. Poles to be drilled in the field will be provided with installation instructions.

Ordering Example: SCH-R4[4]/277[2]/BL[3]

Square Pole-Mounted Occupancy Sensor 16' to 30'

SCH-S

Square Pole-Mounted Occupancy Sensor: 16 to 30' - an outdoor occupancy sensor with 0-10V interface dimming control that mounts directly to the pole. Wide 360° pattern. Module colors are available in Black, Gray, and White. Module is cut for round pole mounting. Pole diameter is needed upon order. Poles to be drilled in the field will be provided with installation instructions.

Ordering Example: SCH-S/277[2]/BL[3]

SCP

The SCP is a photo-control with motion sensing accessory thats mounts to the side of any new or existing 3"-5" round or square straight pole. The SCP enables any pole mounted luminaire in excess of 75 watts, to meet California Title 24 requirements with integral 20KV/10KA surge protection for added reliability and serviceability.

For more detail:

http://www.aal.net/products/sensor_control_programmable

[1]PRECOMMISSIONED SITESYNC ORDERING INFORMATION: When ordering a fixture with the SiteSync lighting control option, additional information will be required to complete the order. The SiteSync Commissioning Form or alternate schedule information must be completed. This form includes Project location, Group information, and Operating schedules. For more detailed information please visit www.HubbellLighting.com/products/sitesync or contact Hubbell Lighting tech support at (800) 345-4928.

SiteSync fixtures with occupancy sensor (SWPM) require the mounting height of the fixture for selection of the lens.

Examples:

SiteSync only : ARX25/1/3K35UV/PS/US/SWP

SiteSync with Motion Control: ARX25/1/3K35UV/PS/US/SWPM-20F

MOB ORDERING INFORMATION: When ordering a fixture with a dimming occupancy sensor option (MOB), please specify the appropriate information. These settings are specified in the ordering as shown in the example below.

ARX25/1/3k35UV/PS/US/MOB - 1 to 30 min - 33%or 50% - ?? / DBT

High to Dim Delay — Low Level — Mounting Height (ft.)

[2]Voltage, [3]Color, [4]Pole Diameter,

Kim Lighting reserves the right to change specifications without notice.