SPS-0231 REV A

FARGO SWING ARM SCONCE

JOB NAME: _____ FIXTURE TYPE: _____

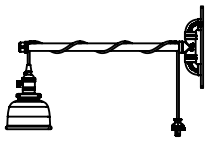

BLE - L - WL008 - _____ - _____ - _____ - _____

A B C D

Order Example: BLE - L - WL008 - 500 - 975 - SWH - NK

A - SHADE FINISH

POWDER COAT FINISHES[1]:

100	Black
105	Textured Black
200	White
300	Dark Green
307	Emerald Green
311	Jadite
370	Mint
380	Chartreuse
390	Teal
400	Barn Red
420	Orange
470	Watermelon
480	Blush Pink
490	Magenta
495	Sherbet Orange
500	Buttery Yellow
570	Sunflower
600	Bronze
601	Chocolate
605	Rust
615	Oil-Rubbed Bronze
700	Royal Blue
705	Navy
710	Cobalt Blue
715	Delphite Blue
790	Lavender
800	Industrial Grey
805	Charcoal Granite
810	Graphite
975	Galvanized

B - ARM FINISH

POWDER COAT FINISHES:

100	Black
105	Textured Black
200	White
300	Dark Green
307	Emerald Green
311	Jadite
370	Mint
380	Chartreuse
390	Teal
400	Barn Red
420	Orange
470	Watermelon
480	Blush Pink
490	Magenta
495	Sherbet Orange
500	Buttery Yellow
570	Sunflower
600	Bronze
601	Chocolate
605	Rust
615	Oil-Rubbed Bronze
700	Royal Blue
705	Navy
710	Cobalt Blue
715	Delphite Blue
790	Lavender
800	Industrial Grey
805	Charcoal Granite
810	Graphite
975	Galvanized

C - CORDS

CSA LISTED CORD OPTIONS:

SBK	Standard Black
SWH	Standard White
CSB	Black Cloth
CSW	White Cloth
CMG	Grey Cloth
CSR	Red Cloth
CRZ	Red Chevron Cloth
CSBW	Black & White Cloth
CSRW	Red & White Cloth
CSBG	Black & Gold Cloth
CSBP	Black & Pink Cloth
CSGW	Gold & White Cloth
CSUW	Blue & White Cloth
CSBB	Black & Brown Cloth

D - SOCKET FINISH & SWITCH

UK	Black Socket with Knob Switch
UP	Black Socket with Black Paddle Switch
NK	Nickel Socket with Knob Switch
NP	Nickel Socket with Black Paddle Switch
BK	Brass Socket with Knob Switch
BP	Brass Socket with Black Paddle Switch

IMPORTANT: *(1) All Powder Coat finished shades, Galvanized excluded, feature a white interior*

DIMENSIONAL DRAWING

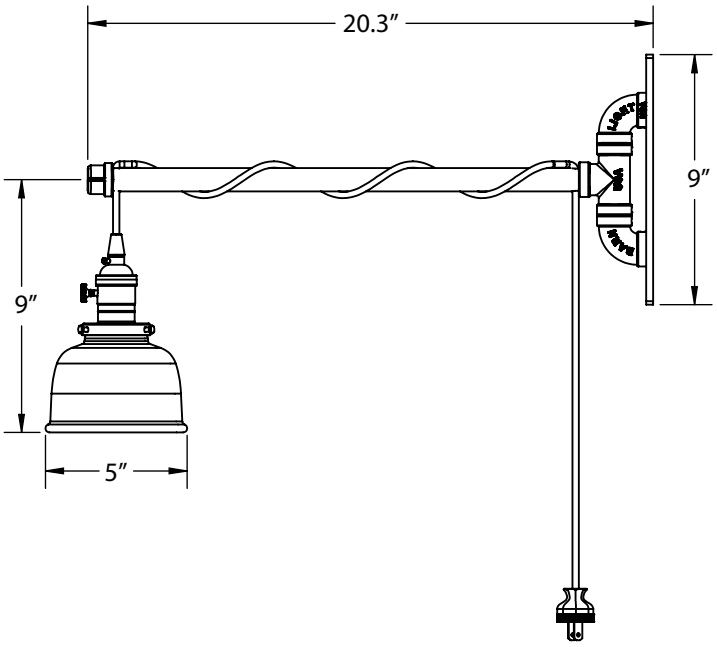

SOCKET FINISH & SWITCH

UK BLACK SOCKET WITH KNOB SWITCH

NK NICKEL SOCKET WITH KNOB SWITCH

BK BRASS SOCKET WITH KNOB SWITCH

KNOB SWITCH OPTIONS

UP BLACK SOCKET WITH BLACK PADDLE SWITCH

NP NICKEL SOCKET WITH BLACK PADDLE SWITCH

BP BRASS SOCKET WITH BLACK PADDLE SWITCH

BLACK PADDLE SWITCH OPTIONS

SPECIFICATIONS

CONSTRUCTION & FINISH

SHADE
Hand-Spun from High Purity 0.050" Thick 3003-O Temper Aluminum

POWDER COAT FINISHES
Polyester Powder Coat Finishes Are Electro-Statically Applied and Thermocured

WALL MOUNT PLATE
Features a Horizontally Pivoting Arm Allowing Customer to Direct Light onto Specific Surfaces

MAX FIXTURE WEIGHT
10 lbs

LIGHT SOURCE

INCANDESCENT
Medium Base E26 Socket, 60W Max, 120 VAC

CERTIFICATIONS, LISTINGS & WARRANTY

MADE IN THE USA
Manufactured and Hand-Crafted in Our 60,000 Square Foot Facility Located in Titusville, FL

CSA LISTED FOR DRY LOCATIONS

LIMITED WARRANTY
For Additional Information on Our Limited Warranty, Please See Our Terms & Conditions