SPS-0429 REV A

PARABOLIC LINEAR 8-LIGHT CHANDELIER

JOB NAME: _____ FIXTURE TYPE: _____

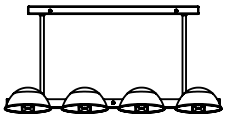

BLE - S - CH032 - _____ - _____ - _____

A B C

Order Example: BLE - S - CH032 - 998 - 12 - 100

A - SHADE FINISH

POWDER COAT FINISHES[1]:

100	Black
105	Textured Black
200	White
300	Dark Green
307	Emerald Green
311	Jadite
370	Mint
380	Chartreuse
390	Teal
400	Barn Red
420	Orange
470	Watermelon
480	Blush Pink
490	Magenta
495	Sherbet Orange
500	Buttery Yellow
570	Sunflower
600	Bronze
601	Chocolate
605	Rust
615	Oil-Rubbed Bronze
700	Royal Blue
705	Navy
710	Cobalt Blue
715	Delphite Blue
790	Lavender
800	Industrial Grey
805	Charcoal Granite
810	Graphite
975	Galvanized

A - SHADE FINISH (CONTINUED)

NATURAL METALS[2]:

995	Raw Copper
996	Weathered Copper
997	Raw Brass
998	Weathered Brass
999	Oil-Rubbed Copper

B - MOUNTING OPTION

6	6″ Stem
12	12″ Stem
18	18″ Stem
24	24″ Stem
36	36″ Stem

C - MOUNTING FINISH[3]

POWDER COAT FINISHES:

100	Black
105	Textured Black
200	White
300	Dark Green
307	Emerald Green
311	Jadite
370	Mint
380	Chartreuse
390	Teal
400	Barn Red
420	Orange
470	Watermelon
480	Blush Pink
490	Magenta
495	Sherbet Orange
500	Buttery Yellow
570	Sunflower
600	Bronze
601	Chocolate
605	Rust
615	Oil-Rubbed Bronze
700	Royal Blue
705	Navy
710	Cobalt Blue
715	Delphite Blue
790	Lavender
800	Industrial Grey
805	Charcoal Granite
810	Graphite
975	Galvanized

IMPORTANT: *(1) All Powder Coat finished shades, excluding 975-Galvanized, feature a white interior (2) Natural Metals have a longer estimated manufacturing time, please check the website for exact lead time. There are no returns accepted on Natural Metals. (3) Mounting includes all components except for shades. Please see website for additional product photographs.*

DIMENSIONAL DRAWING

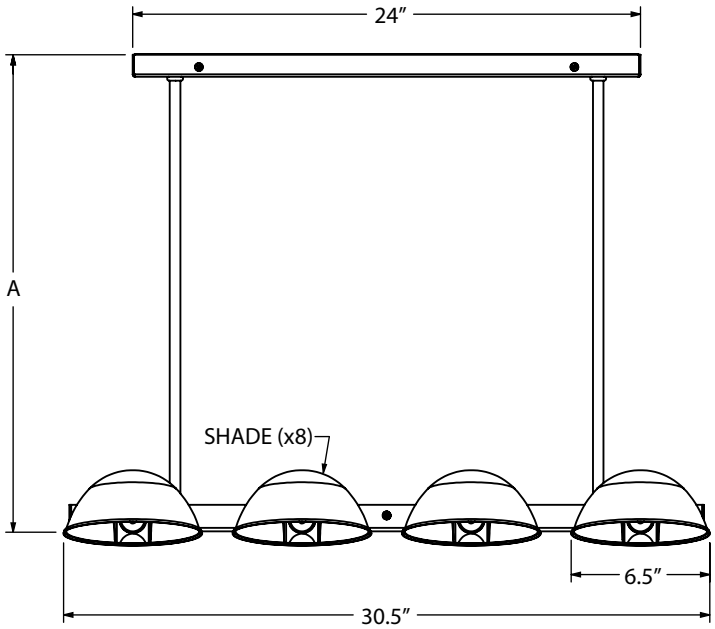

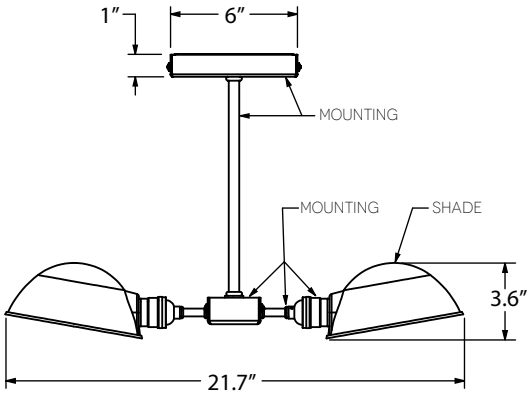

STEM LENGTH	A
6 (6″ Stem)	7.6″
12 (12″ Stem)	13.6″
18 (18″ Stem)	19.6″
24 (24″ Stem)	25.6″
36 (36″ Stem)	37.6″

SPECIFICATIONS

CERTIFICATIONS, LISTINGS & WARRANTY

MADE IN THE USA
Manufactured and Hand-Crafted in Our 60,000 Square Foot Facility Located in Titusville, FL

UL LISTED FOR DAMP LOCATIONS

LIMITED WARRANTY
For Additional Information on Our Limited Warranty, Please See Our Terms & Conditions

LIGHT SOURCE

E26 MEDIUM BASE SOCKETS
8 Sockets Total, 60W Max per Socket, 480W Max Fixture Wattage

CONSTRUCTION & FINISH

RECTANGULAR CANOPY
Constructed from 19 Gauge Galvanized Steel

MOUNTING STEMS
1/4" Schedule 40 Aluminum Pipe (0.540" Actual OD)
Custom Lengths Available Upon Request.

SHADE
Stamped from Aluminum or Natural Metals

POWDER COAT FINISHES
Polyester Powder Coat Finishes Are Electro-Statically Applied and Thermocured

MAX FIXTURE WEIGHT
15 lbs