SPS-0277 REV A

ROCHESTER SERIES

JOB NAME: _____ FIXTURE TYPE: _____

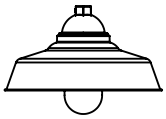

BLE - _____ - _____ - _____ - _____ - _____ - _____ - _____ -
A B C D E F G

_____ - _____ - _____ - _____
H I J K

Order Example: BLE - G - SI14 - 400 - G6 - 400 - NA - DD - TGG - 975 - RIB - E26

A - MOUNTING STYLE

C	Cord Hung
CN	Chain Hung
F	Flush Mount
G	Gooseneck
S	Stem Mount

B - SHADE SIZE

ROCHESTER:

SI12
SI14
SI16
SI18

C - SHADE FINISH

PORCELAIN FINISHES[1]:

150	Black
250	White
350	Vintage Green
355	Jadite
455	Cherry Red
550	Yellow
650	Bronze
750	Cobalt Blue
765	Delphite Blue
850	Graphite
950	Metallic Chrome

POWDER COAT FINISHES[2]:

100	Black
105	Textured Black
200	White
300	Dark Green
307	Emerald Green
311	Jadite
370	Mint
380	Chartreuse
390	Teal
400	Barn Red
420	Orange
470	Watermelon
480	Blush Pink
490	Magenta
495	Sherbet Orange
500	Buttery Yellow
570	Sunflower
600	Bronze
601	Chocolate
605	Rust
615	Oil-Rubbed Bronze
700	Royal Blue

C - SHADE FINISH (CONTINUED)

POWDER COAT FINISHES[2]:

705	Navy
710	Cobalt Blue
790	Lavender
715	Delphite Blue
800	Industrial Grey
805	Charcoal Granite
810	Graphite
975	Galvanized

D - MOUNTING

CSA LISTED CORD OPTIONS:

SBK	Standard Black
SWH	Standard White
CMG	Grey Cotton
CRZ	Red Chevron
CSB	Black Cloth
CSW	White Cloth
CSR	Red Cloth
CSBB	Black & Brown Cloth
CSRW	Red & White Cloth
CSGW	Gold & White Cloth
CSBG	Black & Gold Cloth
CSBW	Black & White Cloth
CSBP	Black & Pink Cloth
CSUW	Blue & White Cloth

NON-CSA LISTED CORD OPTIONS:

CBK	Black Cotton
TBK	Black Cotton Twist
TWH	White Cotton Twist
TBR	Brown Cotton Twist
TRD	Red Cotton Twist
TPT	Putty Cotton Twist
TBW	Black & White Twist
TRW	Red & White Twist
TBB	Brown & Beige Twist

CHAIN MOUNT OPTIONS:

CN36	3′ of Chain
CN48	4′ of Chain
CN60	5′ of Chain
CN72	6′ of Chain

FLUSH MOUNT OPTIONS:

FM

D - MOUNTING (CONTINUED)

GOOSENECK OPTIONS:

G1	**G16**
G2	**G17**
G3	**G19**
G4	**G22**
G5	**G24**
G6	**G25**
G7	**G26**
G8	**G32**
G9	**G34**
G10	**G35**
G11	**G36**
G12	**G40**
G13	**G64**
G14	**G65**
G15	

STEM MOUNT OPTIONS:

ST506	.5″ Stem Mount, 6″
ST512	.5″ Stem Mount, 12″
ST518	.5″ Stem Mount, 18″
ST524	.5″ Stem Mount, 24″
ST536	.5″ Stem Mount, 36″
ST548	.5″ Stem Mount, 48″
ST706	.75″ Stem Mount, 6″
ST712	.75″ Stem Mount, 12″
ST718	.75″ Stem Mount, 18″
ST724	.75″ Stem Mount, 24″
ST736	.75″ Stem Mount, 36″
ST748	.75″ Stem Mount, 48″

E - MOUNTING FINISH

*Please Note: See **Section C** for Finish Options. 980-Brushed Aluminum is also available for Gooseneck and Stem mounting styles. If Porcelain Finish is selected, mounting will be powder coat painted-to-match.*
(I) If Cord Hung [C] or Flush Mount [F] Mounting Style, selection identifies shade top and canopy finish
(II) If Chain Hung [CN] Mounting Style, selection identifies shade top, chain and canopy finish
(III) If Stem Mount [S] Mounting Style, selection identifies shade top, stem and canopy finish

980	Brushed Aluminum

F - CORDS[3]

NA	Not Applicable

*Please Note: See **Section D** for all applicable CSA and Non-CSA Listed Cord Options for Chain Hung Mounting Style*

G - MOUNTING ACCESSORY

NA	None/Not Applicable
HSC	Hang Straight Canopy[4]
HDSMC	Heavy Duty Stem Mount Canopy[4]
DD	Dusk-to-Dawn Photocell[5]

H - GUARD OPTION

NA	None/No Guard
WGG	Wire Guard
CGG	Standard Cast Guard
TGG	Heavy Duty Cast Guard

I - GUARD FINISH

*Please Note: See **Section C** for all Guard Finish options. If no guard selected in Section H, select NA. If Porcelain Finish selected, guard will be powder coat painted-to-match.*

NA	Not Applicable

J - GLASS OPTIONS

CLR	Clear Glass
FST	Frosted Glass
RIB	Ribbed Glass
BLU	Blue Glass
RED	Red Glass
AMB	Amber Glass
GRN	Green Glass
CCR	Clear Crackle Glass
SMK	Smoke Crackle Glass
HCR	Honey Crackle Glass

K - LIGHT SOURCE

E26	100 Watt Max
GU24	18 Watt Max

IMPORTANT: *(1) All Porcelain Enamel finished shades feature a white interior and black outer rim (2) All Powder Coat finished shades, Galvanized excluded, feature a white interior (3) Only applicable if Chain Hung Mounting Style selected in Section A, select NA if another Mounting Style is selected (4) Only applicable if Stem Mount Mounting Style selected in Section A (5) Only applicable if Gooseneck Mounting Style selected in Section A*

MOUNTING STYLE

CHAIN HUNG PENDANT (CN)

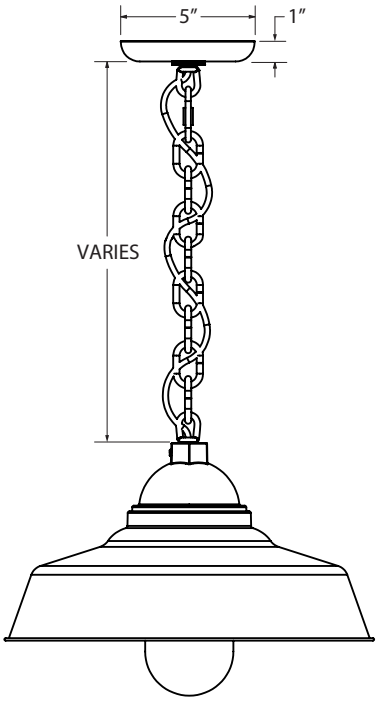

FLUSH MOUNT (F)

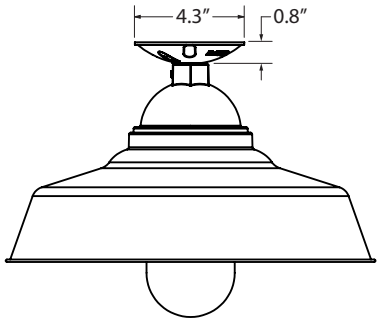

STEM MOUNT PENDANT (S)

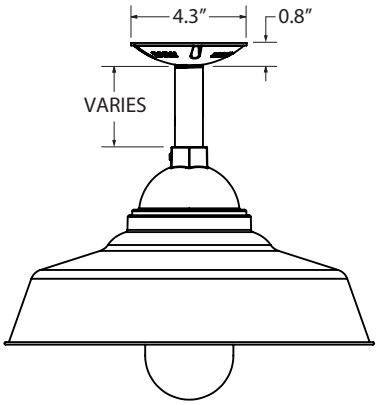

GOOSENECK (G)

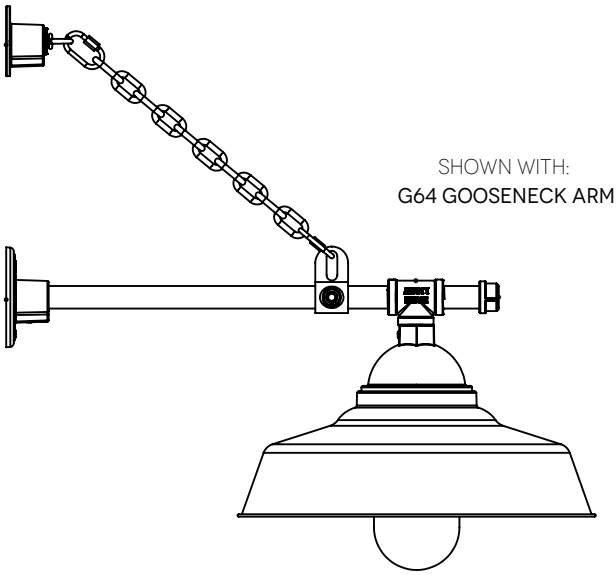

CORD HUNG PENDANT (C)

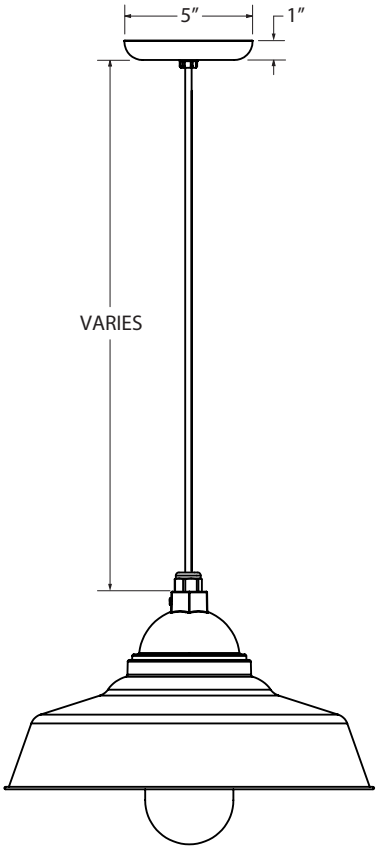

LUMINAIRE DIMENSIONS

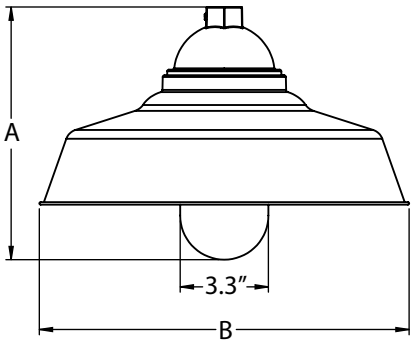

SHADE CODE	HEIGHT (A)	DIAMETER (B)
SI12	10.25″	12″
SI14	10.25″	14″
SI16	10.25″	16″
SI18	10.25″	18″

SPECIFICATIONS

MOUNTING

STEM
1/2" Nominal (0.84" Actual) or 3/4" Nominal (1.05" Actual) Sch 40, 6063 Aluminum Mounting Stem. Custom Lengths Available upon Request.

GOOSENECK
1/2" Nominal (0.84" Actual) or 3/4" Nominal (1.05" Actual) Sch 40, 6063 Aluminum Gooseneck

CORD
Cord-hung Pendants Include 7' Of Standard Cord or 5' Of Cotton Cord, +/- For Socket Orientation

CHAIN
4-Gauge Chain Complete with Quick Link for On-Site Adjustments to Chain's Length

MAX FIXTURE WEIGHT
10 lbs

LIGHT SOURCE

INCANDESCENT
Medium Base E26 Socket, 120 VAC

COMPACT FLUORESCENT
Bi-Pin Base GU24 Socket, 120 VAC

LED
Rochester Series Also Available in LED. Please Visit Website for LED Specifications.

MATERIAL & FINISHES

POWDER COAT SHADE
Hand-Spun from High Purity 0.050" Thick 3003-O Temper Aluminum

PORCELAIN SHADE
Hand-Spun from 20 Gauge Sheet Metal

POWDER COAT FINISHES
Polyester Powder Coat Finishes Are Electro-Statically Applied and Thermocured

PORCELAIN FINISHES
Applied by Hand and Fired in a High Temperature Oven

CERTIFICATIONS, LISTINGS & WARRANTY

MADE IN THE USA
Manufactured and Hand-Crafted in Our 60,000 Square Foot Facility Located in Titusville, FL

CSA LISTED FOR WET LOCATIONS
Includes All Gooseneck, Stem and Flush Mounting Styles

CSA LISTED FOR DAMP LOCATIONS
Includes All Chain and Select Cord Hung Mounting Styles

LIMITED WARRANTY
For Additional Information on Our Limited Warranty, Please See Our Terms & Conditions

UL CERTIFICATION
UL Listed Fixtures Available upon Request. Please Consult Factory for Additonal Information.