SPS-0321 REV B

SYDNEY SERIES

JOB NAME: _____ FIXTURE TYPE: _____

BLE - _____ - _____ - _____ - _____ - _____ - _____ - _____ -

A B C D E F G

_____ - _____ - _____ - _____ - _____

H I J K L

Order Example: BLE - G - ULS16 - 600 - G22 - 980 - NA - NA - 975 - FST - NA - LED16.8 - 2700K

A - MOUNTING STYLE

C	Cord Hung
CN	Chain Hung
F	Flush Mount
G	Gooseneck
S	Stem Mount

B - SHADE & SHADE SIZE

SYDNEY:

ULS12	12″
ULS14	14″
ULS16	16″
ULS18	18″

C - SHADE FINISH

POWDER COAT FINISHES[1]:

100	Black
105	Textured Black
200	White
300	Dark Green
307	Emerald Green
311	Jadite
370	Mint
380	Chartreuse
390	Teal
400	Barn Red
420	Orange
470	Watermelon
480	Blush Pink
490	Magenta
495	Sherbet Orange
500	Buttery Yellow
570	Sunflower
600	Bronze
601	Chocolate
605	Rust
615	Oil-Rubbed Bronze
700	Royal Blue
705	Navy
710	Cobalt Blue
715	Delphite Blue
790	Lavender
800	Industrial Grey
805	Charcoal Granite
810	Graphite
975	Galvanized

NATURAL Metals[2]:

995	Raw Copper
996	Weathered Copper
997	Raw Brass
998	Weathered Brass
999	Oil-Rubbed Copper

D - MOUNTING

*Please Note: If Flush Mount [F] is selected in **Section A**, please select **NA***

NA	Not Applicable

CSA LISTED CORD OPTIONS:

SBK	Standard Black
SWH	Standard White
CSB	Black Cloth
CSW	White Cloth
CMG	Grey Cotton
CSR	Red Cloth
CRZ	Red Chevron
CSBB	Black & Brown Cloth
CSRW	Red & White Cloth
CSGW	Gold & White Cloth
CSBG	Black & Gold Cloth
CSBW	Black & White Cloth
CSBP	Black & Pink Cloth
CSUW	Blue & White Cloth

CHAIN MOUNT OPTIONS:

CN36	3′ of Chain[3]
CN48	4′ of Chain[3]
CN60	5′ of Chain[3]
CN72	6′ of Chain[3]

GOOSENECK OPTIONS:

G1[3]	**G11[3]**	**G25**
G2[3]	**G12[3]**	**G26[3]**
G3[3,11]	**G13**	**G32**
G4[11]	**G14**	**G34[3]**
G5[3]	**G15**	**G35[3]**
G6	**G16[3]**	**G36[3]**
G7	**G17**	**G40[3]**
G8	**G19[3]**	**G64[3]**
G9	**G22**	**G65[3]**
G10	**G24**	

STEM MOUNT OPTIONS:

ST506	.5″ Stem Mount, 6″[3]
ST512	.5″ Stem Mount, 12″[3]
ST518	.5″ Stem Mount, 18″[3]
ST524	.5″ Stem Mount, 24″[3]
ST536	.5″ Stem Mount, 36″[3]
ST548	.5″ Stem Mount, 48″[3]
ST706	.75″ Stem Mount, 6″
ST712	.75″ Stem Mount, 12″
ST718	.75″ Stem Mount, 18″
ST724	.75″ Stem Mount, 24″
ST736	.75″ Stem Mount, 36″
ST748	.75″ Stem Mount, 48″

E - MOUNTING FINISH

*Please Note: See **Section C** for Finish Options. 980-Brushed Aluminum is also available for Gooseneck and Stem mounting styles.*
(I) If Cord Hung [C], selection identifies canopy finish
(II) If Chain Hung [CN] Mounting Style, selection identifies chain and canopy finish. Natural Metals are not applicable
(III) If Stem Mount [S] Mounting Style, selection identifies stem and canopy finish
(IV) If Flush Mount [F] Mounting Style, selection identifies canopy finish. Natural Metals are not applicable

980	Brushed Aluminum

F - CORDS[4]

NA	Not Applicable

*Please Note: See **Section D** for all applicable CSA Listed Cord Options*

G - CAP OPTION[5]

NA	No Cap/Not Applicable
CAP	Cap[6]

H - CAST GUARD FINISH

*Please Note: See **Section C** for all applicable Cast Guard Finish Options*
(I) Cast Guard not available in Natural Metals
(II) Fixture manufactured with TGG guard only.

I - GLASS OPTION

CLR	Clear Glass
FST	Frosted Glass
RIB	Ribbed Glass
SMK	Smoke Crackle Glass
BLU	Blue Glass
RED	Red Glass
AMB	Amber Glass
GRN	Green Glass

J - MOUNTING ACCESSORY

Please Note: Mounting Accessories below are only applicable with select Mounting Styles. Please refer to product listings on our website for further detail.

NA	None/Not Applicable
HSC	Hang Straight Canopy[3,7]
HDSMC	Heavy Duty Stem Mount Canopy[3,7]
HDBP	Heavy Duty Backing Plate[3]
DD	Dusk-to-Dawn Photocell[12]
DBPC	Decorative Backing Plate Cover[12]
DCC	Decorative Canopy Cover[7,8]

K - LIGHT SOURCE

E26	100 Watt Max
GU24	GU24 Bi-Pin, 18W Max[9]
LED16.8	16.8W LED, 1600 Lumen

L - COLOR TEMPERATURE[10]

NA	Not Applicable
2700K	2700K, Warm White
3000K	3000K, Neutral White
3500K	3500K, Bright White
4000K	4000K, Cool White

IMPORTANT: *(1) All Powder Coat finished shades, Galvanized excluded, feature a white interior (2) Natural Metals have a longer estimated manufacturing time, please check the website for exact lead time. There are no returns accepted on Natural Metals (3) Not available in Natural Metals (4) Only applicable if Chain Hung Mounting Style is selected in Section A (5) Cap not available if Chain Hung mounting style is selected in Section A (6) Cap Finish will match shade finish selected in Section C (7) Only applicable if Stem Mounting Style selected in Section A (8) Only available if Natural Metal is selected in Section C (9) Fixtures configured with a GU24 socket are non-returnable (10) Only applicable if LED16.8 Light Source is selected in Section K, select NA if non-LED source selected (11) Not available in a 16″ or larger shade size (12) Not available with G19, G36, & G40 Gooseneck option*

MOUNTING STYLE

CHAIN HUNG PENDANT (CN)

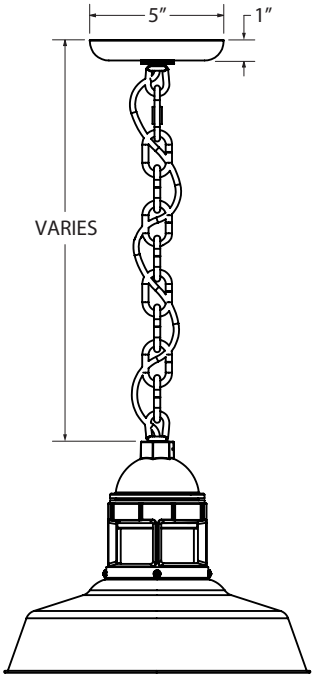

CORD HUNG PENDANT (C)

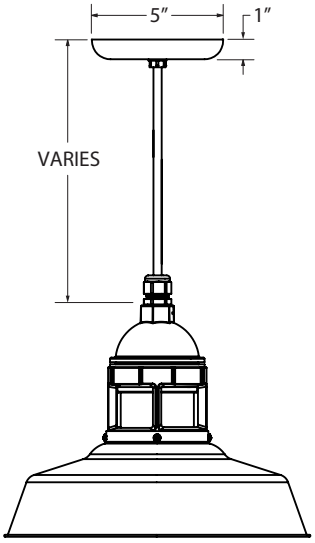

STEM MOUNT PENDANT (S)

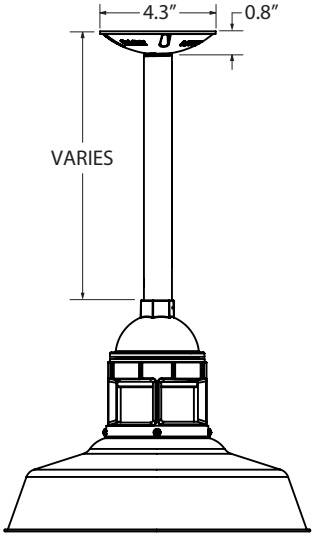

FLUSH MOUNT (F)

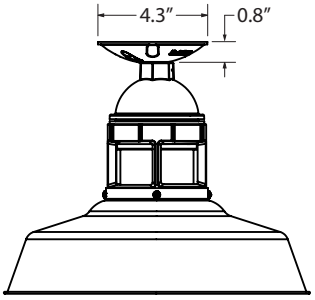

GOOSENECK (G)

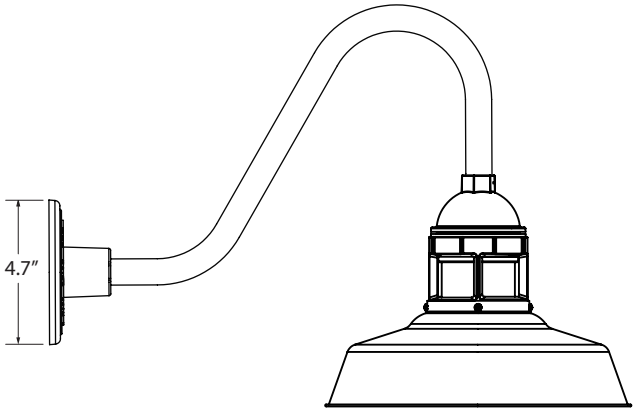

SHOWN WITH: G26 GOOSENECK ARM

LUMINAIRE DIMENSIONS

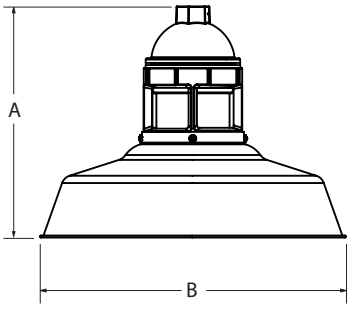

SHADE CODE	HEIGHT (A)	DIAMETER (B)
ULS12	9.9″	12″
ULS14	10.6″	14″
ULS16	11.2″	16″
ULS18	11.9″	18″

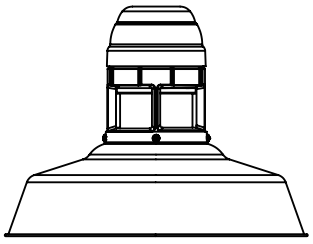

SHOWN WITH OPTIONAL CAP SECTION – G

SPECIFICATIONS

CERTIFICATIONS, LISTINGS & WARRANTY

MADE IN THE USA
Manufactured and Hand-Crafted in Our 60,000 Square Foot Facility Located in Titusville, FL

CSA LISTED FOR WET LOCATIONS
Includes All Gooseneck, Stem and Flush Mounting Styles

CSA LISTED FOR DAMP LOCATIONS
Includes All Chain and Cord Hung Mounting Styles

LIMITED WARRANTY
For Additional Information on Our Limited Warranty, Please See Our Terms & Conditions

OPERATING TEMPERATURE
-30˚C to 40˚C

SHADE & FINISHES

POWDER COAT SHADE
Hand-Spun from High Purity 0.050" Thick 3003-O Temper Aluminum

POWDER COAT FINISHES
Polyester Powder Coat Finishes Are Electro-Statically Applied and Thermocured

COPPER
Hand-Spun from High Purity .032 Thick C11000-O60 ETP Copper

BRASS
Hand-Spun from High Purity .050" Thick C2600-O60 Brass

MOUNTING

STEM
1/2" Nominal (0.84" Actual) or 3/4" Nominal (1.05" Actual) Sch 40, 6063 Aluminum Mounting Stem. Custom Lengths Available upon Request.

GOOSENECK
1/2" Nominal (0.84" Actual) or 3/4" Nominal (1.05" Actual) Sch 40, 6063 Aluminum Gooseneck

CORD
Cord-Hung Pendants Include 8' of Cord, +/- For Socket Orientation

CHAIN
4-Gauge Chain Complete with Quick Link for On-Site Adjustments to Chain's Length

MAX FIXTURE WEIGHT
10 lbs

LIGHT SOURCE

INCANDESCENT
Medium Base E26 Socket, 120 VAC, 100W Max

COMPACT FLUORESCENT
Bi-Pin Base GU24 Socket, 120 VAC, 18W Max

LED16.8 LIGHT SOURCE

LED TYPE: CREE CXB SERIES COB

INITIAL LUMENS DELIVERED: UP TO 1600 LUMENS

L90 (11K) > 61,000 HOURS

AVAILABLE CCT: 2700K, 3000K, 3500K, 4000K
Custom Temperatures Available upon Request

90+ CRI (R9 TYPICAL 60)
80+ CRI and 95+ CRI (R9 Typical 85) Available upon Request

2 STEP MACADAMS ELLIPSE

EFFICACY: UP TO 95 LPW
High Efficacy Available upon Request, Consult Factory for Additional Information

LED16.8 ELECTRICAL/LED DRIVER

DRIVER TYPE: ERP EBR020U-0400-42

DRIVE CURRENT: 400mA

POWER FACTOR > 0.9

EFFICIENCY: UP TO 85% TYPICAL

INPUT VOLTAGE: 120 VAC

CLASS 2 POWER SUPPLY

LED DRIVER LIFETIME: > 100,000 HOURS (@ 25 DEG C AMBIENT)

IP20 MINIMUM RATING CASE WITH SILICONE-BASED POTTING

PROTECTIONS
Output Open Load, Over-Current and Short-Circuit (hiccup), and Over-Temperature with Auto Recovery

CONDUCTED AND RADIATED EMI
Compliant with FCC CFR Title 47 Part 15 Class B (120 VAC), Class A (277 VAC) and EN55015 (CISPR 15) at 220, 230 and 240 VAC

DIMMING

LED 16.8
Triac & ELV Dimming at 120VAC, Able to Dim down to 1%.
Dependent on Specific Dimmer.
0-10V Dimming Available upon Request.

COMPATIBLE DIMMERS
Consult Factory for Additional Information on Dimming